YOKO DELTA

G7V-151/US

Rim mounted 3-hole basin mixer with waste

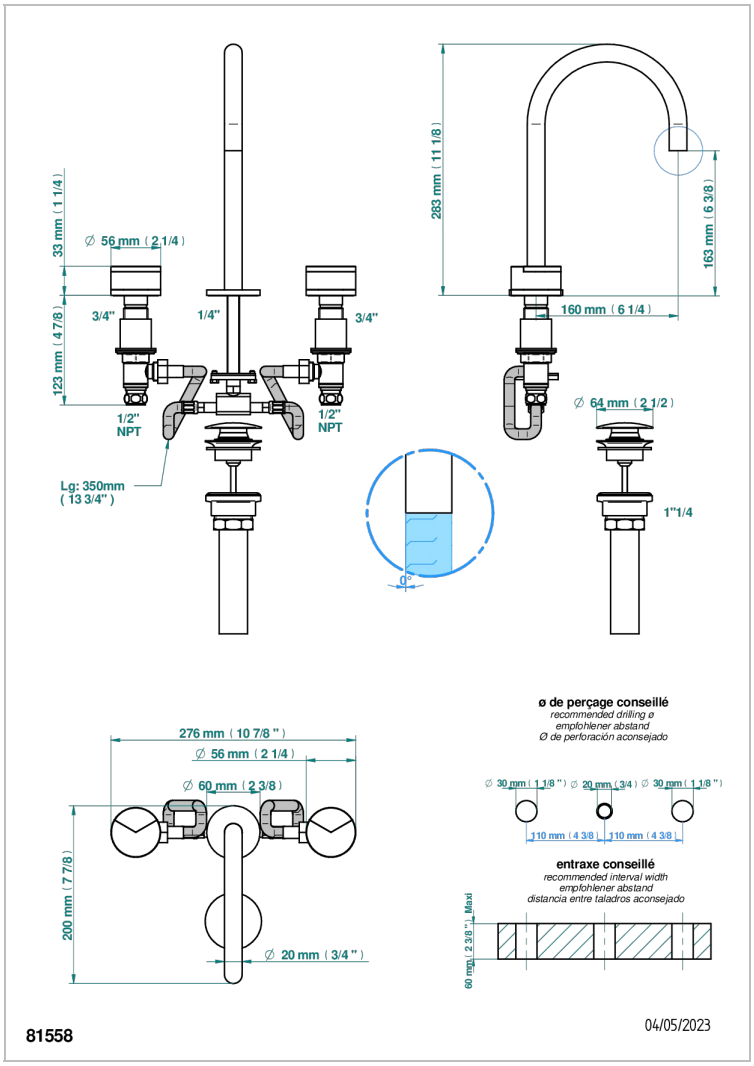

CARACTERÍSTICAS

- Yoko Delta
- Rim mounted 3-hole basin mixer with waste

ACABADOS DISPONIBLES

Bronce claro - D01
Cerámica negra mate - D30
Cromo - A02
Cromo mate - C02
Dorado - F01
Dorado mate - F07
Dorado pálido - F30
Dorado pálido mate (sin barniz) - F31
Natural smoked Brass - A13
Niquel - B01
Niquel mate - C01
Niquel viejo - H28
Polished chrome with gold inlay - GA1
Pvd blush - H62
Pvd blush mate - H60
Pvd color latón - H49
Pvd color latón mate - H50
Pvd color níquel - H55
Pvd color níquel mate - H56
Pvd color oro - H52
Pvd color oro mate - H53
Pvd grafito - H64
Pvd grafito mate - H65
Pvd marrón bronce - F33
Pvd marrón bronce mate - F34
Pvd umber - H66
Pvd umber mate - H67