YOKO DELTA HOWLITE

G7W-6500HSV

Single lever basin mixer without waste, high model

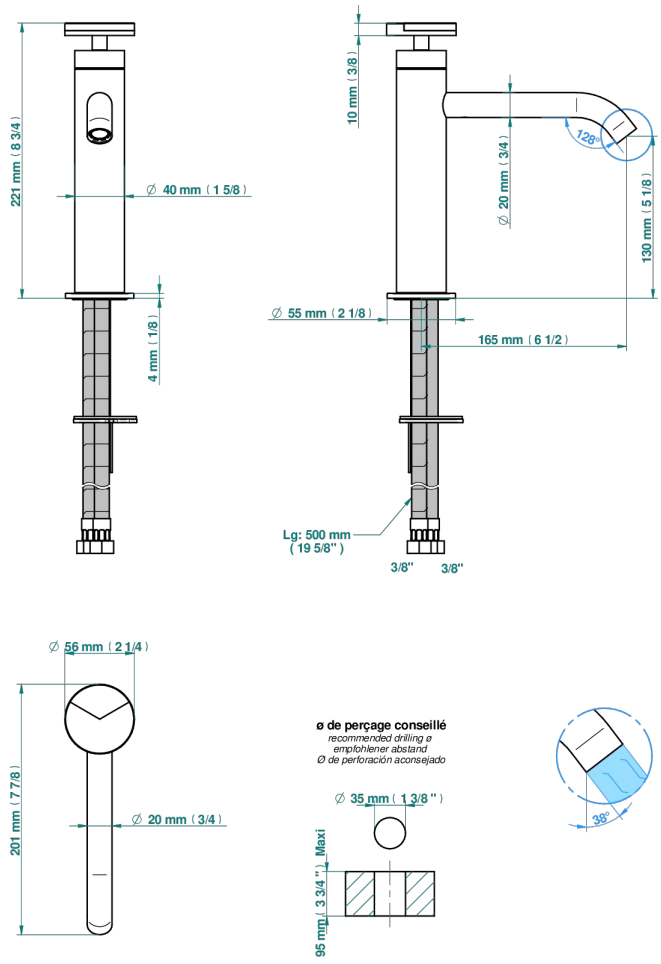

特色

- Yoko Delta Howlite
- Single lever basin mixer without waste, high model

可选饰面

Black ceram - D30
Blush PVD - H62
Graphite PVD - H64
Matt Umber PVD - H67
Matt blush PVD - H60
Matt graphite PVD - H65

Natural smoked Brass - A13
PVD哑光棕铜 - F34
PVD哑光金 - H53
PVD哑光铜 - H50
PVD哑光镍 - H56
PVD抛光铜 - H49

PVD棕铜 - F33
PVD金色 - H52
PVD镍 - H55
Umber PVD - H66
哑光浅金 - F31
哑光金 - F07

哑光铬 - C02
哑光镍 - C01
复古镍 - H28
抛光金（24K金） - F01
抛光铬 - A02
抛光镍 - B01

浅金 - F30
漆面铜 - D01