YOKO

G7R-5840/MBG

Trim only for WC douche including: trigger spray, wall mounted single lever mixer, reinforced hose (49 1/4"), wall outlet with integrated elbow with safety stopper

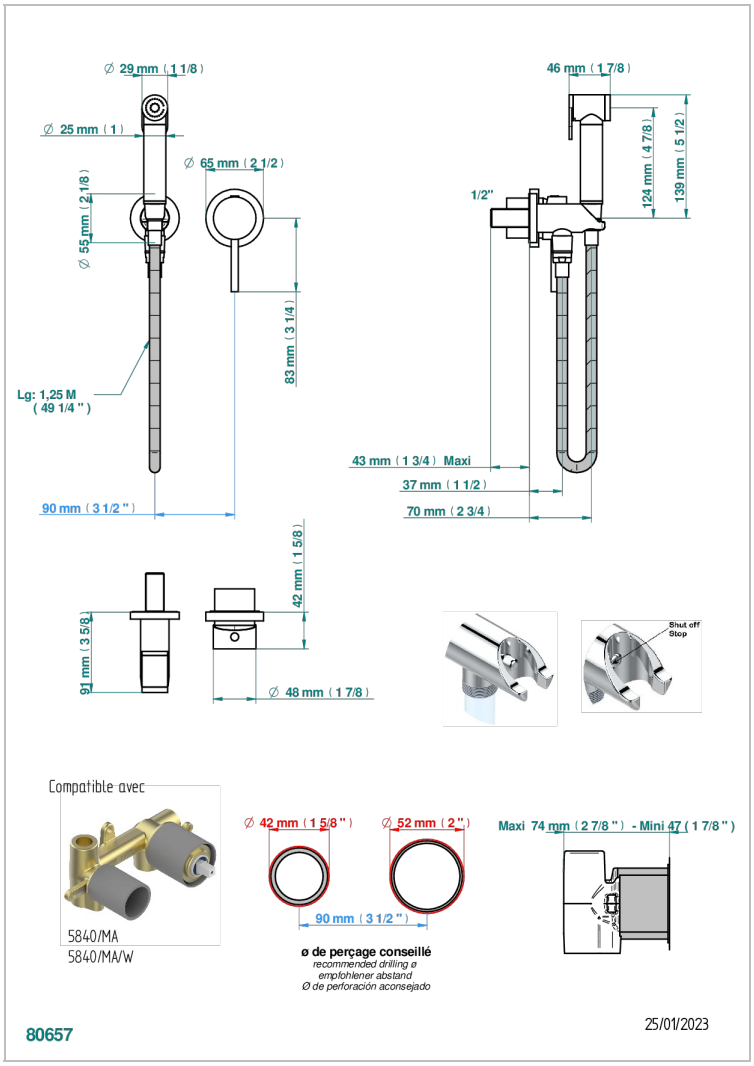

CHARACTERISTIC

- ACS : 19ACCLY412

STANDARDS

RELATED SKU'S

- Ref. G00-5840/MAUS Rough parts for concealed wall-mounted mixer with ½" outlet

AVAILABLE FINITIONS

Black ceram - D30
Blush PVD - H62
Brass color PVD - H49
Brown bronze color PVD - F33
Chrome polished - A02
Gold color PVD - H52
Gold mat - F07
Gold polished - F01
Graphite PVD - H64
Light coated bronze - D01
Matt Umber PVD - H67
Matt blush PVD - H60
Matt brass color PVD - H50
Matt brown bronze color PVD - F34
Matt chrome (American satin) - C02
Matt gold color PVD - H53
Matt graphite PVD - H65
Matt nickel (American satin) - C01
Matt nickel color PVD - H56
Natural smoked Brass - A13
Nickel antique / Sovereign - H28
Nickel color PVD - H55
Nickel polished - B01
Soft gold - F30
Soft matt gold - F31
Umber PVD - H66