NANO WITH LEVER HANDLES

G5B-5840/MBG

Trim only for WC douche including: trigger spray, wall mounted single lever mixer, reinforced hose (49 1/4"), wall outlet with integrated elbow with safety stopper

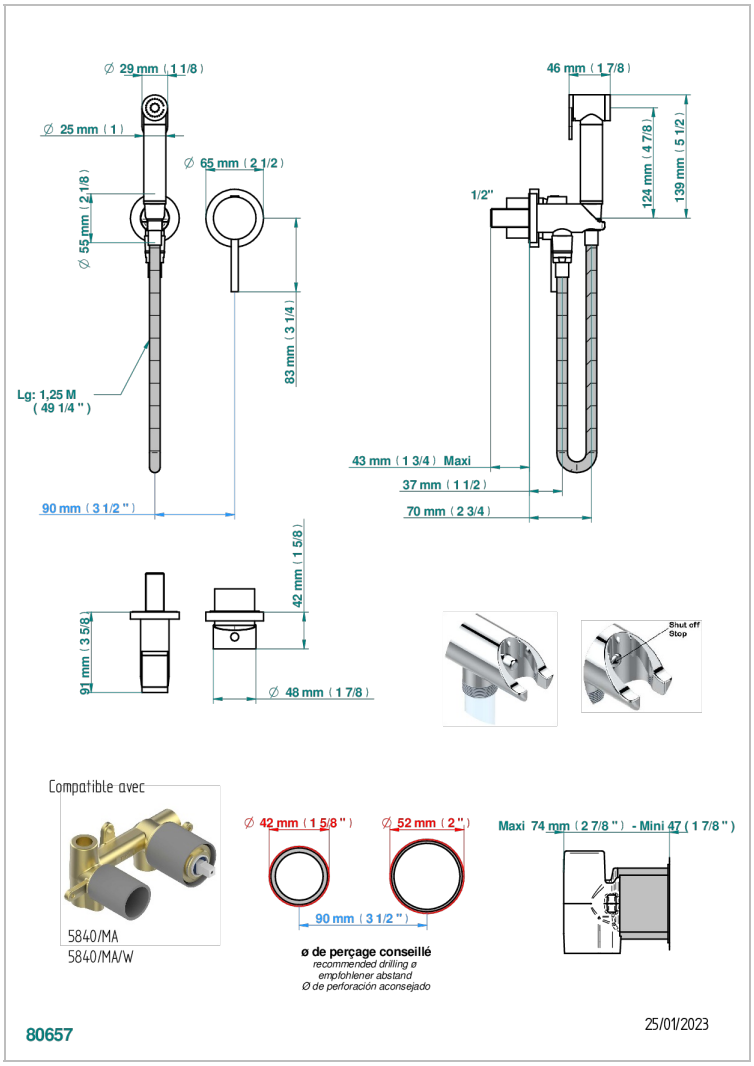

CHARACTERISTIC

- ACS : 19ACCLY412

STANDARDS

RELATED SKU'S

- Ref. G00-5840/MAUS Rough parts for concealed wall-mounted mixer with ½" outlet

AVAILABLE FINITIONS

Black ceram - D30
Chrome polished - A02
Chrome polished / gold polished - G02
Gold mat - F07
Gold polished - F01
Matt chrome (American satin) - C02
Matt nickel (American satin) - C01
Nickel antique / Sovereign - H28
Nickel polished - B01
Soft gold - F30
Soft matt gold - F31