ESTRELA

U3J-504VGUS

2-function deck diverter with trim

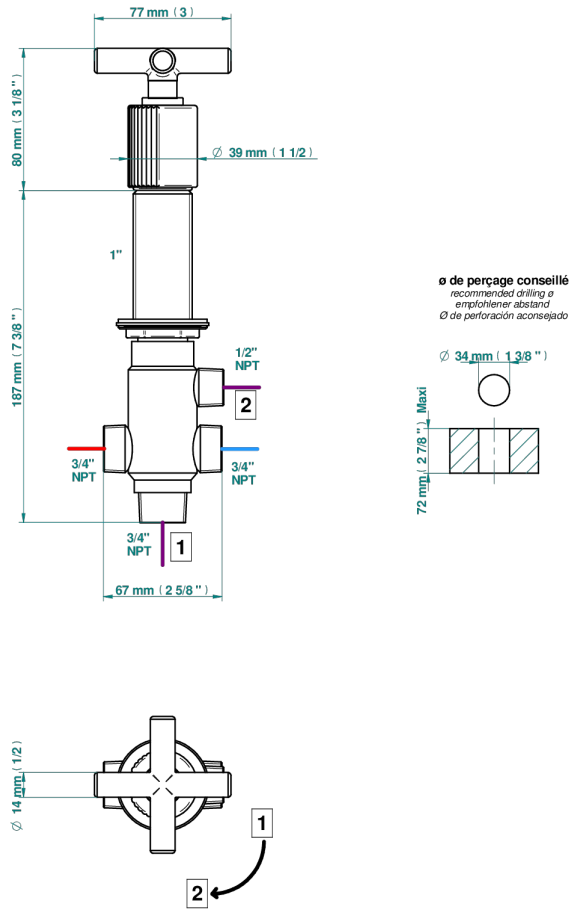

CHARACTERISTIC

- Estrela
- 2-function deck diverter with trim

TECHNICAL SPECS

• Recommandé : 3 bars (max. 5 bars) - Advised : 43,5 psi (max. 72 psi)

• débit sortie Douchette 1/2 : 50 l/min à 3 bars - function 1/2 : 13,2 gpm at 43.5 psi

• débit sortie Bec 3/4 : 70 l/min - function 3/4 : 18,5 gpm at 43.5 psi

AVAILABLE FINITIONS

Black ceram - D30
Blush PVD - H62
Brass color PVD - H49
Brown bronze color PVD - F33
Chrome polished - A02
Gold color PVD - H52
Gold mat - F07
Gold polished - F01
Graphite PVD - H64
Matt Umber PVD - H67
Matt blush PVD - H60
Matt brass color PVD - H50
Matt brown bronze color PVD - F34
Matt chrome (American satin) - C02
Matt gold color PVD - H53
Matt graphite PVD - H65
Matt nickel (American satin) - C01
Matt nickel color PVD - H56
Natural smoked Brass - A13
Nickel antique / Sovereign - H28
Nickel color PVD - H55
Nickel polished - B01
Soft gold - F30
Soft matt gold - F31
Umber PVD - H66