BROADWAY

A52-TWT6H2

Traditional towel warmer, 6 rails, 625 mm x 925 mm, hydronic with 2 stylised handles

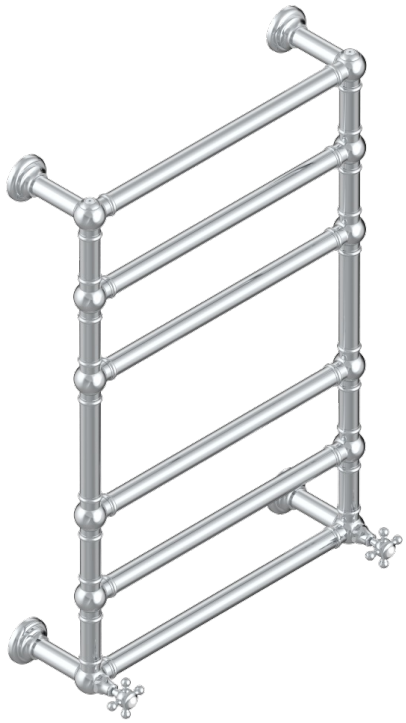

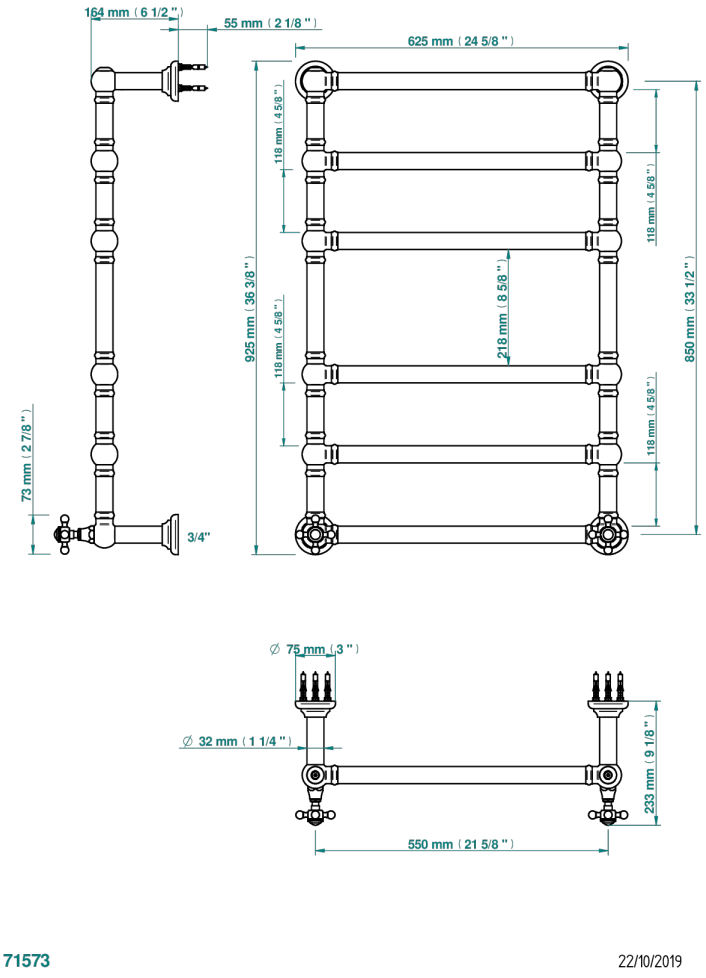

CARACTERÍSTICAS

- Broadway
- Traditional towel warmer, 6 rails, 625 mm x 925 mm, hydronic with 2 stylised handles

ESPECIFICACIONES TÉCNICAS

- Pression : 0,5 bars < P < 3 bars (recommandée)
- Pressure : 7.25 psi < P < 43.5 psi (advised)
- Température eau maximale conseillée : 60°C
- Maximum water temperature advised: 140°F
- Hauteur minimale au sol (maximum height from the ground) : 60 cm (24")
- Puissance / Power : 128W à Delta T 30

ACABADOS DISPONIBLES

Bronce claro - D01
Cromo - A02
Cromo mate - C02
Dorado - F01
Dorado mate - F07
Dorado pálido - F30
Dorado pálido mate (sin barniz) - F31
Niquel - B01
Niquel mate - C01
Pvd blush - H62
Pvd blush mate - H60
Pvd color latón - H49
Pvd color latón mate - H50
Pvd color níquel - H55
Pvd color níquel mate - H56
Pvd color oro - H52
Pvd color oro mate - H53
Pvd grafito - H64
Pvd grafito mate - H65
Pvd marrón bronce - F33
Pvd marrón bronce mate - F34
Pvd umber - H66
Pvd umber mate - H67