SUN DRAGON

U5D-TWT8H2

Traditional towel warmer, 8 rails, 625 mm x 1325 mm, hydronic with 2 stylised handles

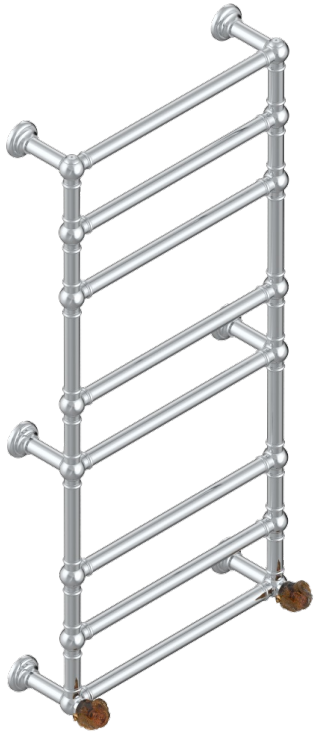

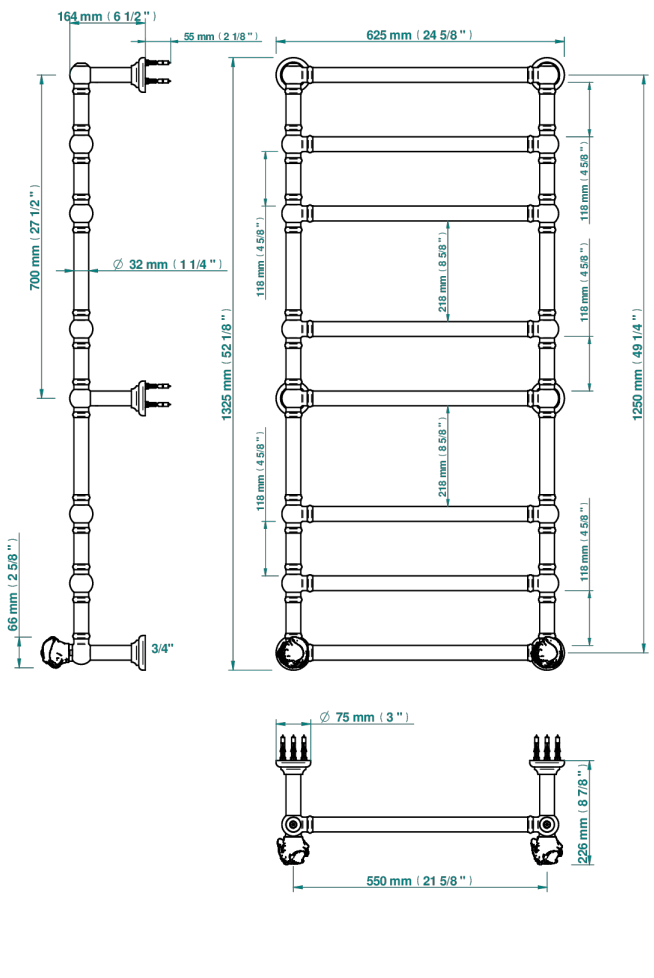

CHARACTERISTIC

- Sun Dragon
- Traditional towel warmer, 8 rails, 625 mm x 1325 mm, hydronic with 2 stylised handles

TECHNICAL SPECS

- Pression : 0,5 bars < P < 3 bars (recommandée)
- Pressure : 7.25 psi < P < 43.5 psi (advised)
- Température eau maximale conseillée : 60°C
- Maximum water temperature advised: 140°F
- Hauteur minimale au sol (maximum height from the ground) : 60 cm (24")
- Puissance / Power : 171W à Delta T 30

AVAILABLE FINITIONS

Blush PVD - H62
Brass color PVD - H49
Brown bronze color PVD - F33
Gold color PVD - H52
Graphite PVD - H64
Lacquered light bronze - D01
Matt Umber PVD - H67
Matt blush PVD - H60
Matt brass color PVD - H50
Matt brown bronze color PVD - F34
Matt chrome - C02
Matt gold - F07
Matt gold color PVD - H53
Matt graphite PVD - H65
Matt nickel (color finish) - C01
Matt nickel color PVD - H56
Nickel color PVD - H55
Polished chrome (color finish) - A02
Polished gold (color finish) - F01
Polished nickel - B01
Soft gold - F30
Soft matt gold - F31
Umber PVD - H66