TROCADERO, LAPIS LAZULI

U7B-526/45

Badetuchstange 450 mm, Ø 25 mm

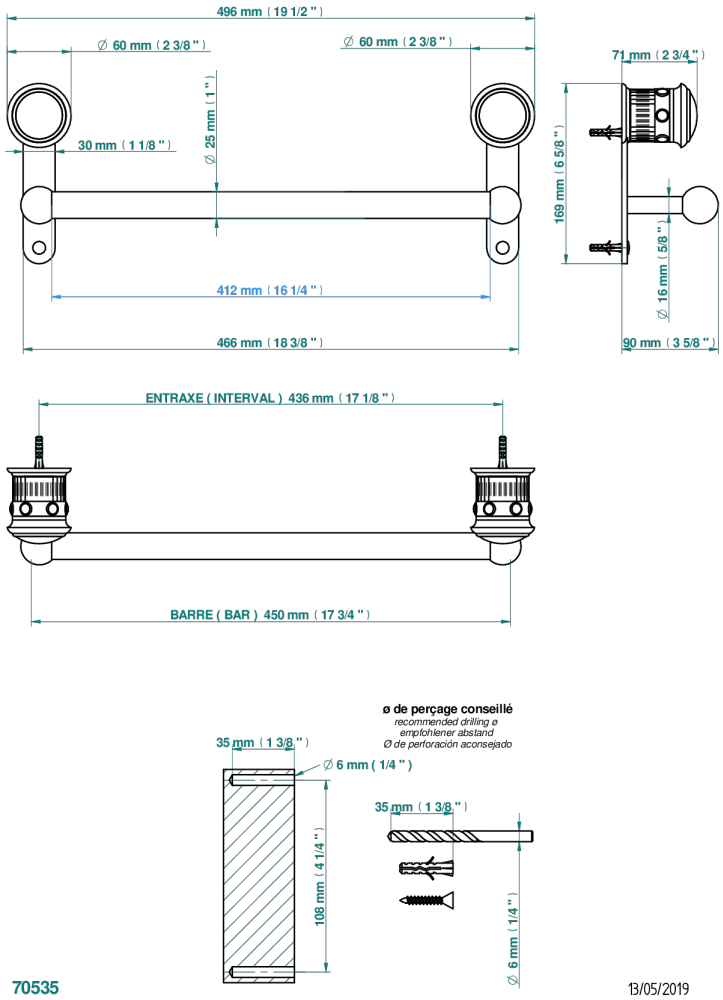

EIGENSCHAFTEN

- Trocadéro, Lapis Lazuli
- Badetuchstange 450 mm, Ø 25 mm

VERFÜGBARE OBERFLÄCHEN

Altnickel - H28
Blassgold - F30
Blassgold matt unlackiert - F31
Chrom - A02
Chrom / gold - G02
Chrom matt - C02
Gold - F01
Gold matt - F07
Mattschwarz keramik - D30
Nickel matt - C01
Pvd blush - H62
Pvd blush matt - H60
Pvd bronze braun - F33
Pvd bronze braun matt - F34
Pvd gold - H52
Pvd gold matt - H53
Pvd graphite - H64
Pvd graphite matt - H65
Pvd messing - H49
Pvd messing matt - H50
Pvd nickel - H55
Pvd nickel matt - H56
Pvd umber - H66
Pvd umber matt - H67
Silbernickel - B01