BONDI

G7F-6541B

Trim only for Built-in basin mixer with spout (two x 1/2″ inlets and one 1/2″ outlet), without waste

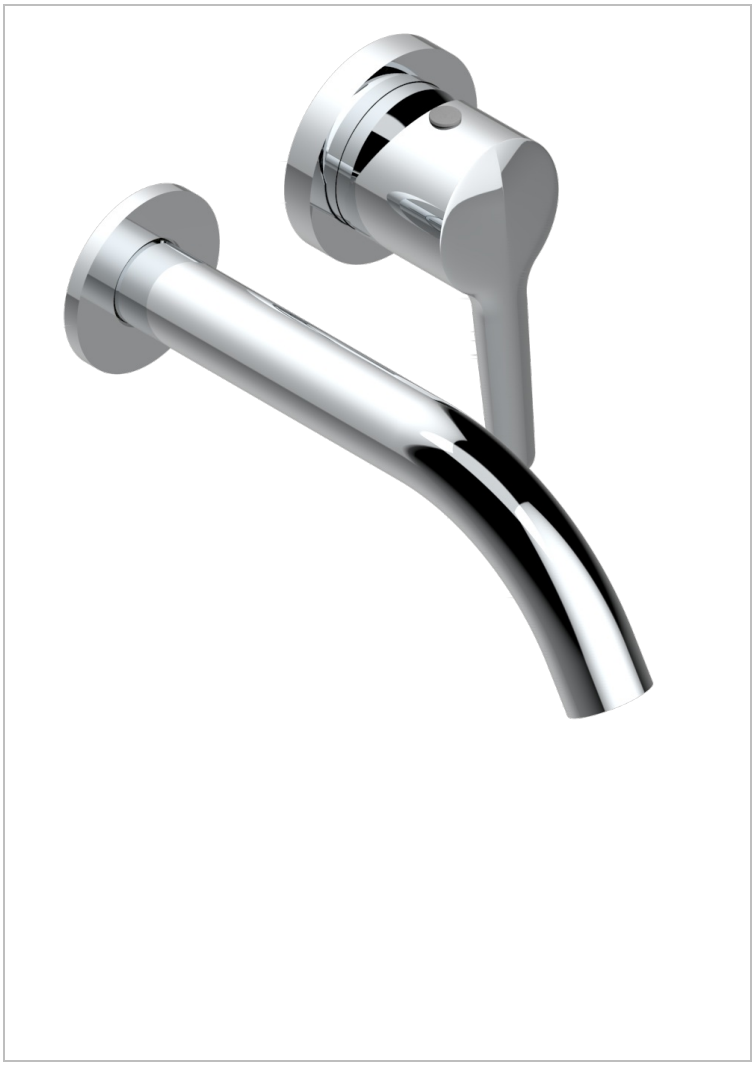

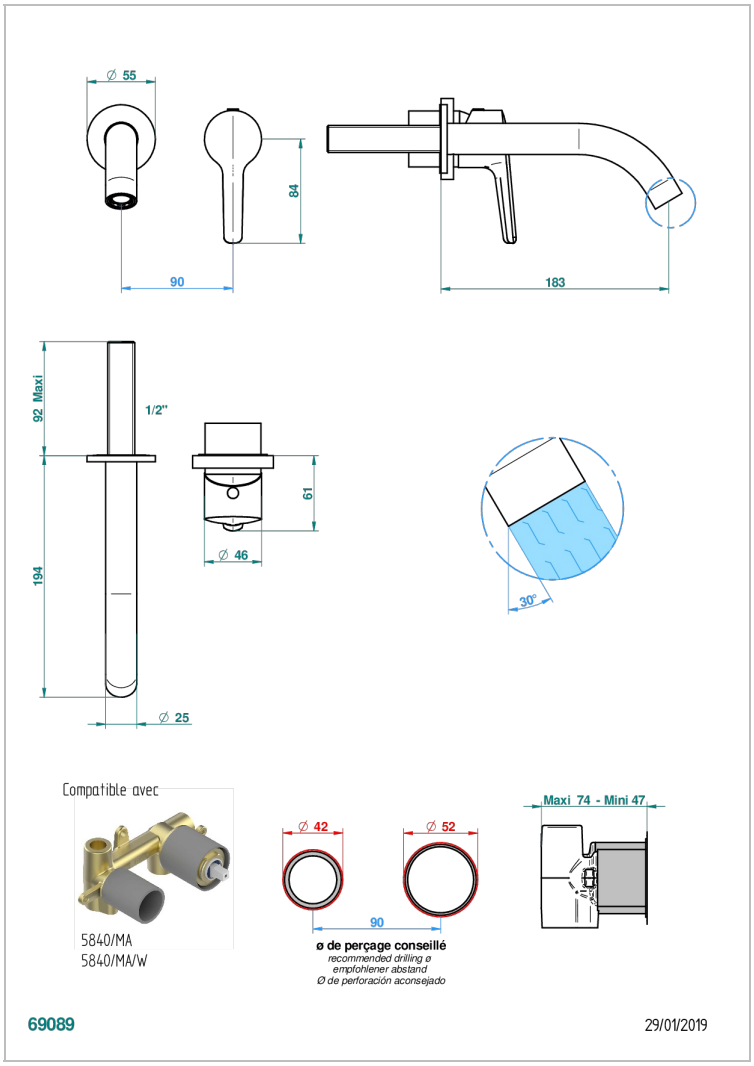

CHARACTERISTIC

- Bondi
- Trim only for Built-in basin mixer with spout (two x 1/2″ inlets and one 1/2″ outlet), without waste

TECHNICAL SPECS

- Recommandé : 3 bars (max. 5 bars) - Advised : 43,5 psi (max. 72 psi)
- 8,3 l/min à 3 bars (2.2 gpm at 43.5 psi)

RELATED SKU'S

- Ref. G00-5840/MA/W Rough parts for concealed wall-mounted mixer with ½″ outlet, for WC douche - WRAS approved

AVAILABLE FINITIONS

Antique nickel - H28
Black ceram - D30
Blush PVD - H62
Brass color PVD - H49
Brown bronze color PVD - F33
Gold color PVD - H52
Graphite PVD - H64
Lacquered light bronze - D01
Matt Umber PVD - H67
Matt blush PVD - H60
Matt brass color PVD - H50
Matt brown bronze color PVD - F34
Matt chrome - C02
Matt gold - F07
Matt gold color PVD - H53
Matt graphite PVD - H65
Matt nickel (color finish) - C01
Matt nickel color PVD - H56
Natural smoked Brass - A13
Nickel color PVD - H55
Polished chrome (color finish) - A02
Polished chrome / Polished gold (color finish) - G02
Polished gold (color finish) - F01
Polished nickel - B01
Soft gold - F30
Soft matt gold - F31
Umber PVD - H66