# WEST COAST WITH GUILLOCHE DECOR

U9C-514V2

Towel rail with one rail for glass door with knob on side and escutcheon the other side

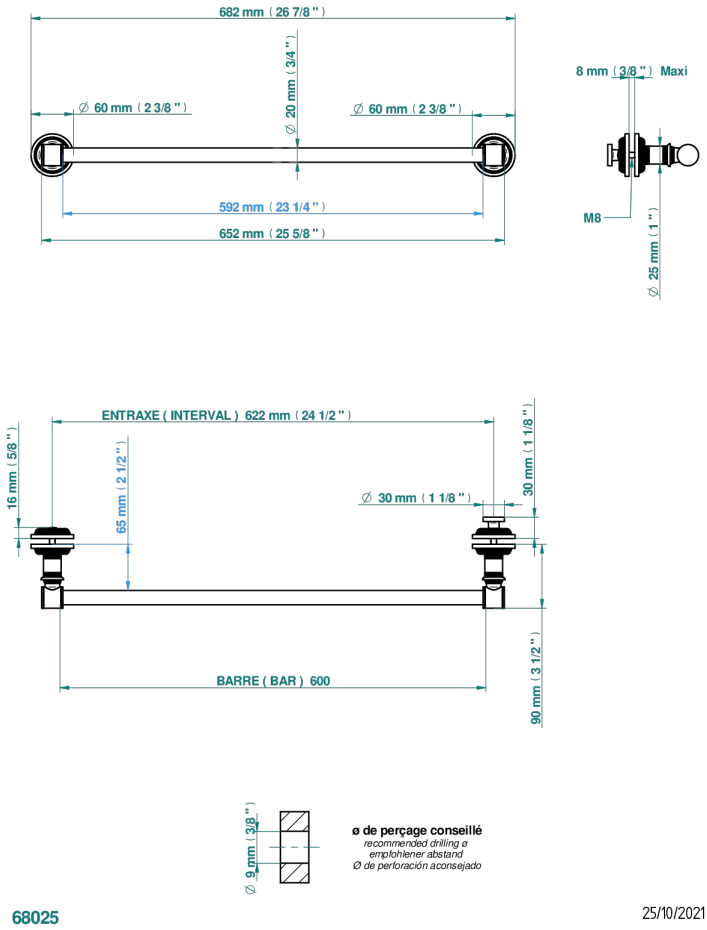


## EIGENSCHAFTEN

- West coast with Guilloché decor
- Towel rail with one rail for glass door with knob on side and escutcheon the other side

## VERFÜGBARE OBERFLÄCHEN

Altnickel - H28
Blassgold - F30
Blassgold matt unlackiert - F31
Bronze hell - D01
Chrom - A02
Chrom matt - C02
Gold - F01
Gold matt - F07
Kupfer altrot matt lackiert - H07
Mattschwarz keramik - D30
Natural smoked Brass - A13
Nickel matt - C01
Polished chrome with gold inlay - GA1
Pvd blush - H62
Pvd blush matt - H60
Pvd bronze braun - F33
Pvd bronze braun matt - F34
Pvd gold - H52
Pvd gold matt - H53
Pvd graphite - H64
Pvd graphite matt - H65
Pvd messing - H49
Pvd messing matt - H50
Pvd nickel - H55
Pvd nickel matt - H56
Pvd umber - H66
Pvd umber matt - H67
Silbernickel - B01