MONTAIGNE LEONARDO GREY MARBLE WITH LEVER HANDLES

G3U-6541B

Trim only for Built-in basin mixer with spout (two x 1/2" inlets and one 1/2" outlet), without waste

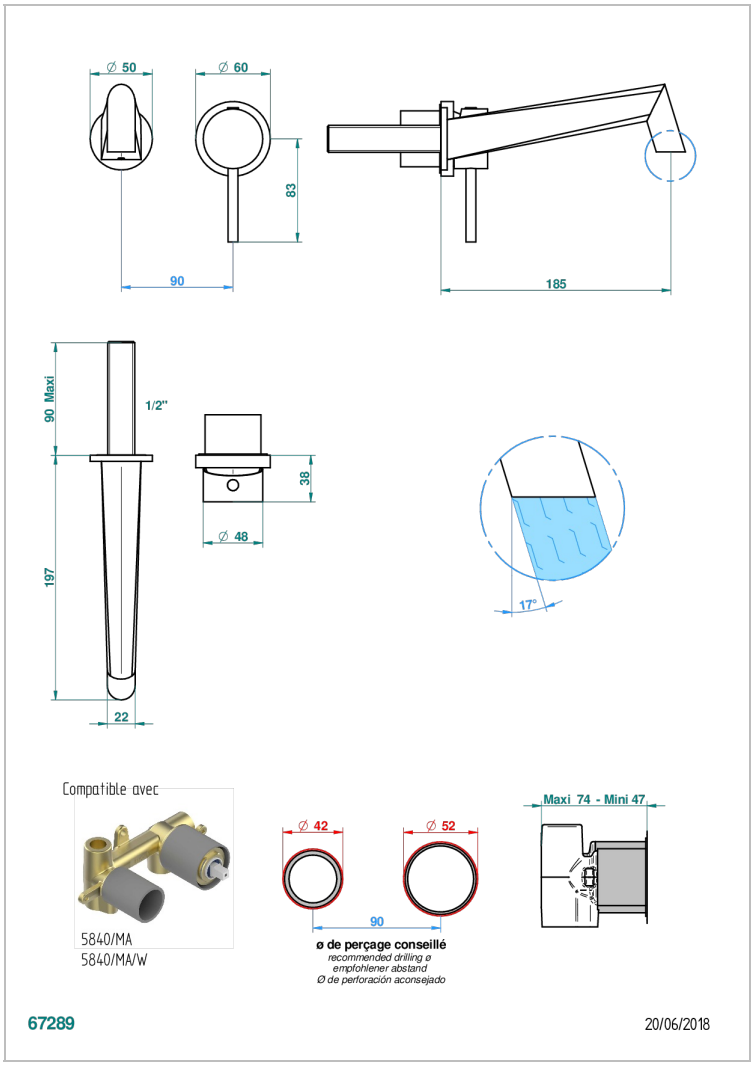

CARACTERÍSTICAS

- Montaigne Leonardo Grey marble with lever handles
- Trim only for Built-in basin mixer with spout (two x 1/2" inlets and one 1/2" outlet), without waste

ESPECIFICACIONES TÉCNICAS

- Recommandé : 3 bars (max. 5 bars) - Advised : 43,5 psi (max. 72 psi)
- 8,3 l/min à 3 bars (2.2 gpm at 43.5 psi)

PRODUCTOS RELACIONADOS

- Ref. G00-5840/MAUS Rough parts for concealed wall-mounted mixer with ½" outlet

ACABADOS DISPONIBLES

Bronce claro - D01
Cerámica negra mate - D30
Cobre viejo mate - H07
Cromo - A02
Cromo / dorado - G02
Cromo mate - C02
Dorado - F01
Dorado mate - F07
Dorado pálido - F30
Dorado pálido mate (sin barniz) - F31
Niquel - B01
Niquel mate - C01
Niquel viejo - H28
Pvd blush - H62
Pvd blush mate - H60
Pvd color latón - H49
Pvd color latón mate - H50
Pvd color níquel - H55
Pvd color níquel mate - H56
Pvd color oro - H52
Pvd color oro mate - H53
Pvd grafito - H64
Pvd grafito mate - H65
Pvd marrón bronce - F33
Pvd marrón bronce mate - F34
Pvd umber - H66
Pvd umber mate - H67