TROCADERO MALACHITE

U7A-6541B

Trim only for Built-in basin mixer with spout (two x 1/2" inlets and one 1/2" outlet), without waste

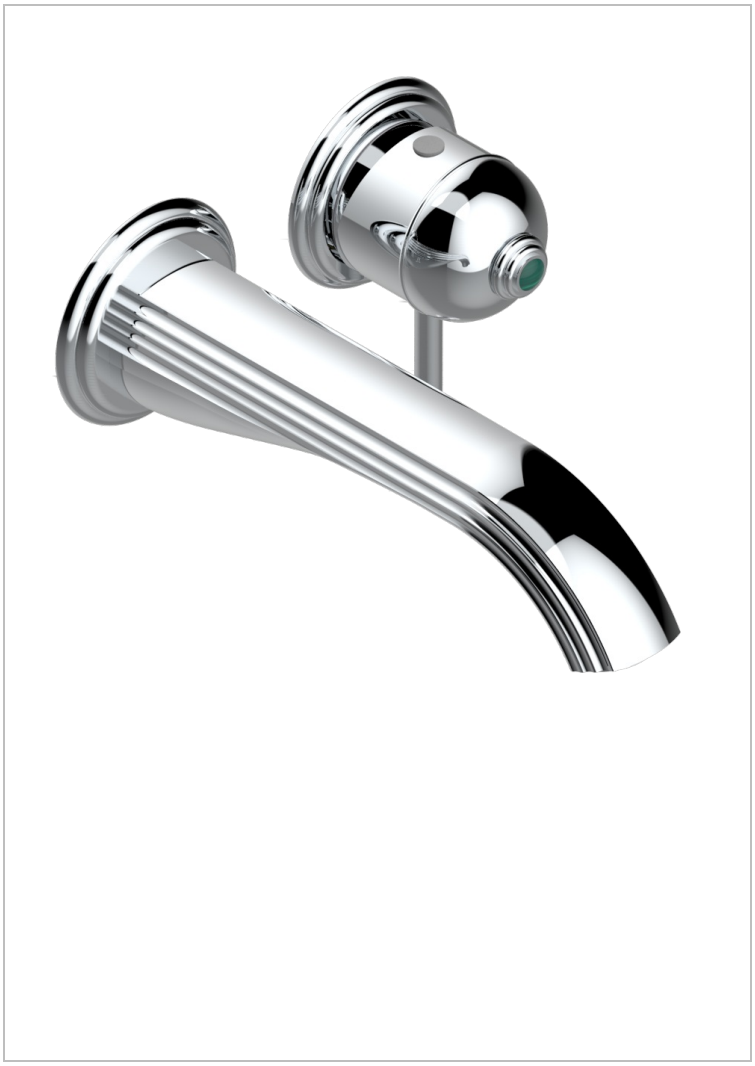

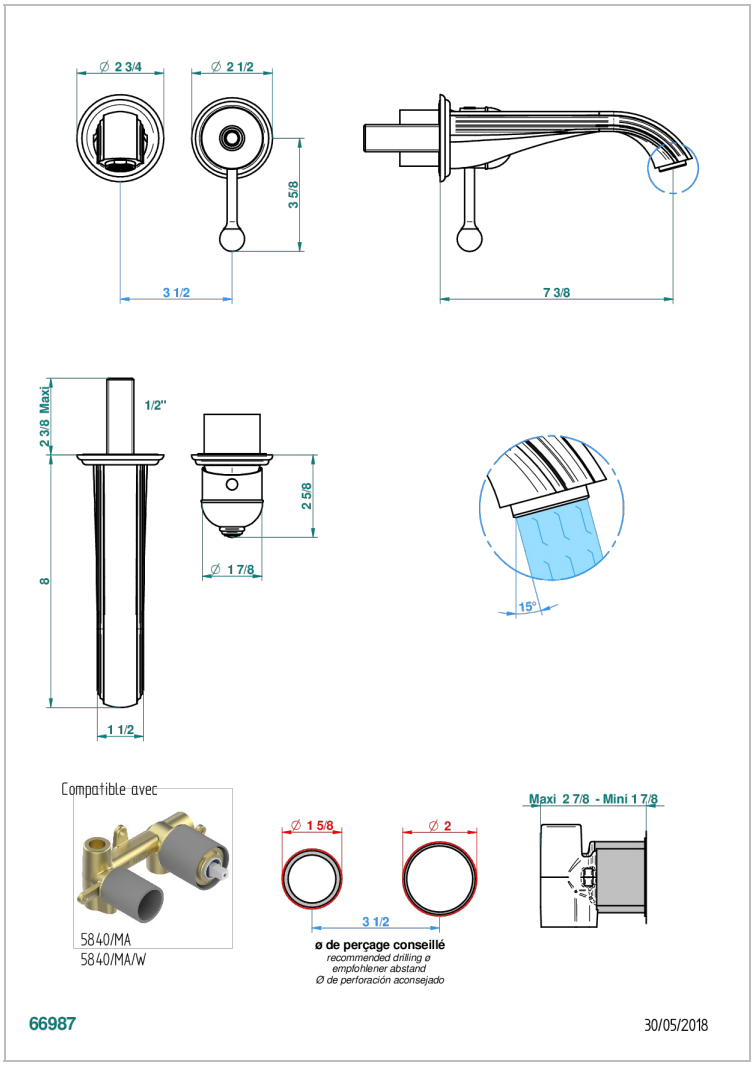

特色

- Trocadéro Malachite
- Trim only for Built-in basin mixer with spout (two x 1/2" inlets and one 1/2" outlet), without waste

相关的SKU

- Ref. G00-5840/MA 卫浴套装，含：入墙式弯管出水管，1米25强化软管，触控式花洒和托勾，美国标准

可选饰面

Black ceram - D30
Blush PVD - H62
Graphite PVD - H64
Matt Umber PVD - H67
Matt blush PVD - H60
Matt graphite PVD - H65

PVD哑光棕铜 - F34
PVD哑光金 - H53
PVD哑光铜 - H50
PVD哑光镍 - H56
PVD抛光铜 - H49
PVD棕铜 - F33

PVD金色 - H52
PVD镍 - H55
Umber PVD - H66
哑光浅金 - F31
哑光金 - F07
哑光铬 - C02

哑光镍 - C01
复古镍 - H28
抛光金（24K金） - F01
抛光铬 - A02
抛光铬/抛光金 - G02
抛光镍 - B01

浅金 - F30