MONTAIGNE GRAND ANTIQUE MARBLE

G3R-5400BE

Trim for THG thermostat with 2 valves - ref. 5 400AE with box for rough parts

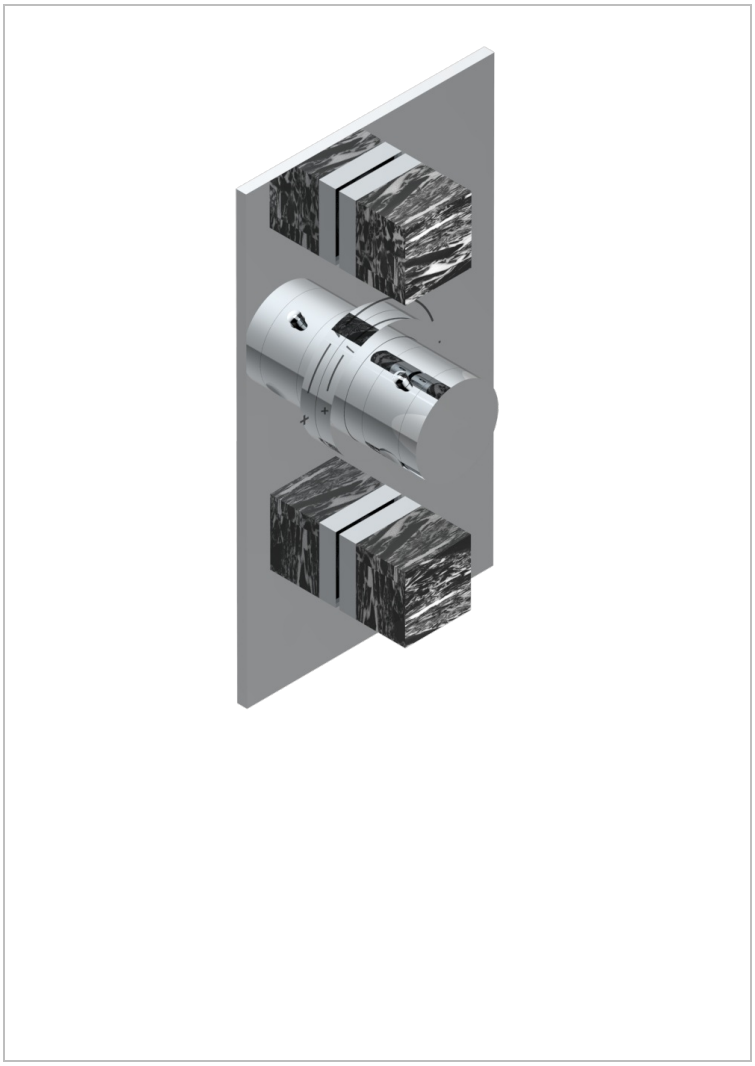

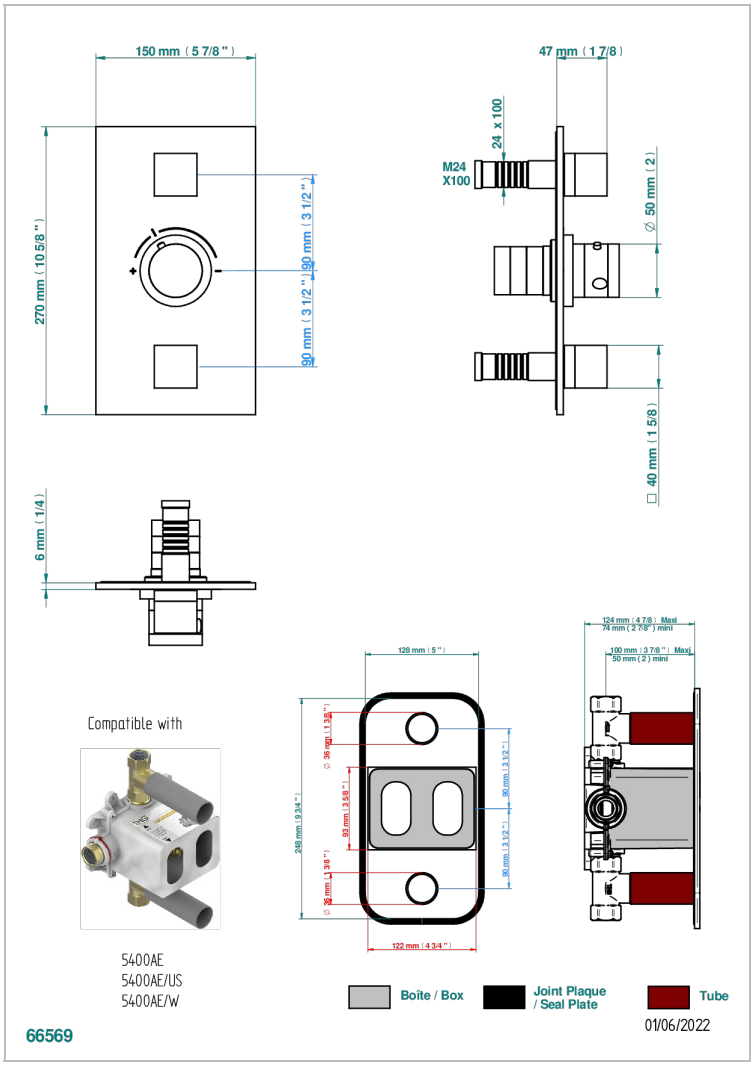

CHARACTERISTIC

- Built-in thermostatic cover for 5400AE - 5400AE/W - 5400AE/US with 2 no. 3/4" outputs
- Requires concealed thermostat réf 5400AE - 5400AE/W - 5400AE/US
- For shower 2 simultaneous functions
- Temperature control knob with security stop at 38°C
- Solid brass plate and knob
- ASME : ASME A112.18.1-2011/CSA B125.1-11
- DVGW : DW-6512CQ0608

STANDARDS

RELATED SKU'S

- Ref. G00-5400AE 3/4" THG thermostat, with wax cartridge, with two valves delivered with a built-in box, no trim
- Ref. G00-5100G Reinforced stop ring for THG thermostatic with fixing set

AVAILABLE FINITIONS

Antique nickel - H28
Black ceram - D30
Blush PVD - H62
Brass color PVD - H49
Brown bronze color PVD - F33
Gold color PVD - H52
Graphite PVD - H64
Lacquered light bronze - D01
Matt Umber PVD - H67
Matt blush PVD - H60
Matt brass color PVD - H50
Matt brown bronze color PVD - F34
Matt chrome - C02
Matt gold - F07
Matt gold color PVD - H53
Matt graphite PVD - H65
Matt nickel (color finish) - C01
Matt nickel color PVD - H56
Nickel color PVD - H55
Polished chrome (color finish) - A02
Polished chrome / Polished gold (color finish) - G02
Polished gold (color finish) - F01
Polished nickel - B01
Soft gold - F30
Soft matt gold - F31
Umber PVD - H66
Varnished matt antique red copper (color finish) - H07