LES ONDES WITH LEVER

G8B-1132SG

5-hole bath/shower mixer with super goliath spout, 2 x 3/4" valves, and rim mounted handshower supplied by progressive cartridge mixer

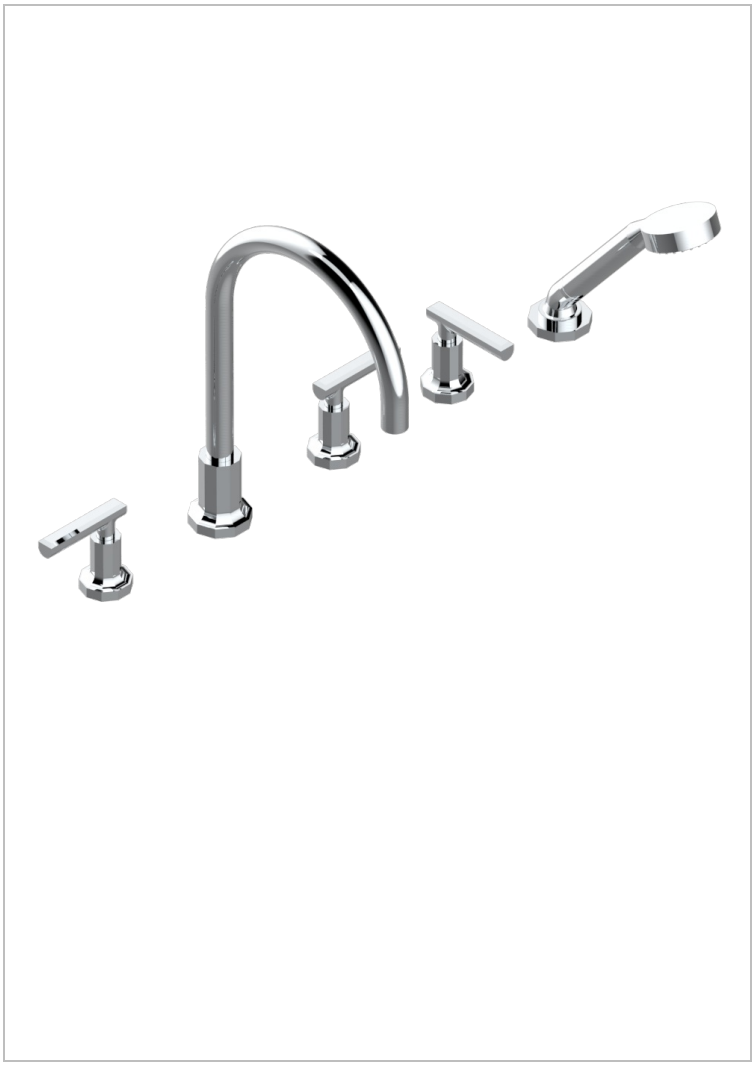

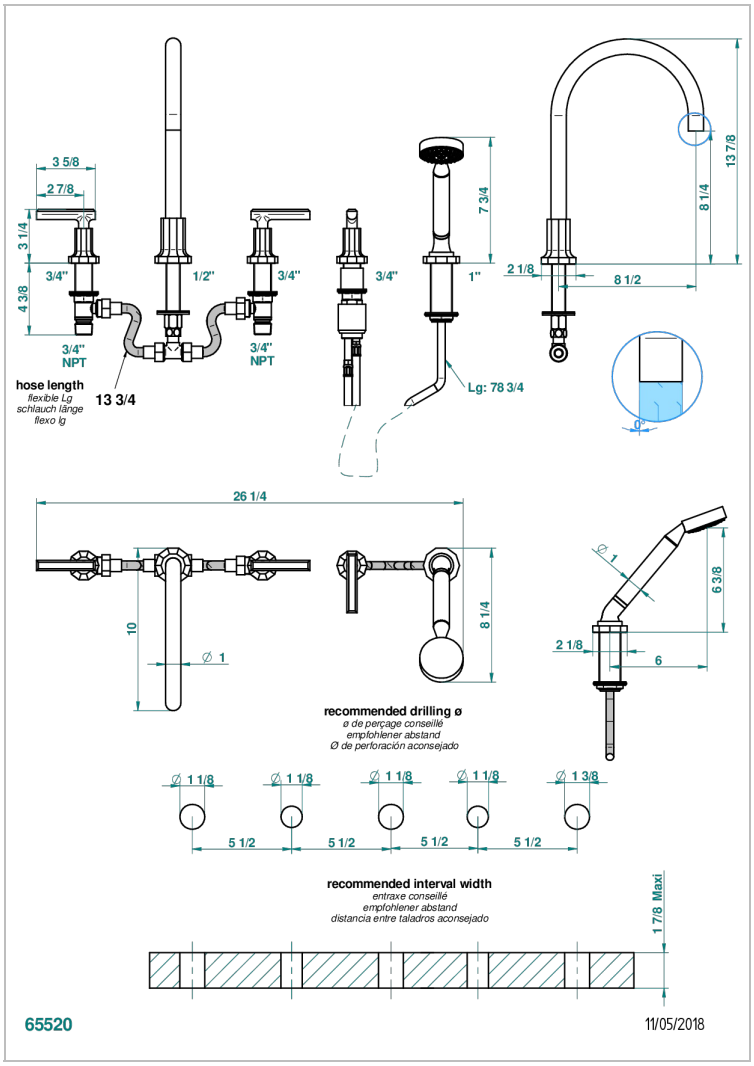

CHARACTERISTIC

- Les Ondes with lever
- 5-hole bath/shower mixer with super goliath spout, 2 x 3/4" valves, and rim mounted handshower supplied by progressive cartridge mixer

AVAILABLE FINITIONS

Antique nickel - H28
Black ceram - D30
Blush PVD - H62
Brass color PVD - H49
Brown bronze color PVD - F33
Gold color PVD - H52
Graphite PVD - H64
Lacquered light bronze - D01
Matt Umber PVD - H67
Matt blush PVD - H60
Matt brass color PVD - H50
Matt brown bronze color PVD - F34
Matt chrome - C02
Matt gold - F07
Matt gold color PVD - H53
Matt graphite PVD - H65
Matt nickel (color finish) - C01
Matt nickel color PVD - H56
Natural smoked Brass - A13
Nickel color PVD - H55
Polished chrome (color finish) - A02
Polished chrome / Polished gold (color finish) - G02
Polished gold (color finish) - F01
Polished nickel - B01
Soft gold - F30
Soft matt gold - F31
Umber PVD - H66
Varnished matt antique red copper (color finish) - H07