MALMAISON METAL

U93-5401BEH

Trim for thermostatic mixer with 2 valves item to be installed horizontal . to adapt on 5 401AHC or 5 401AHM

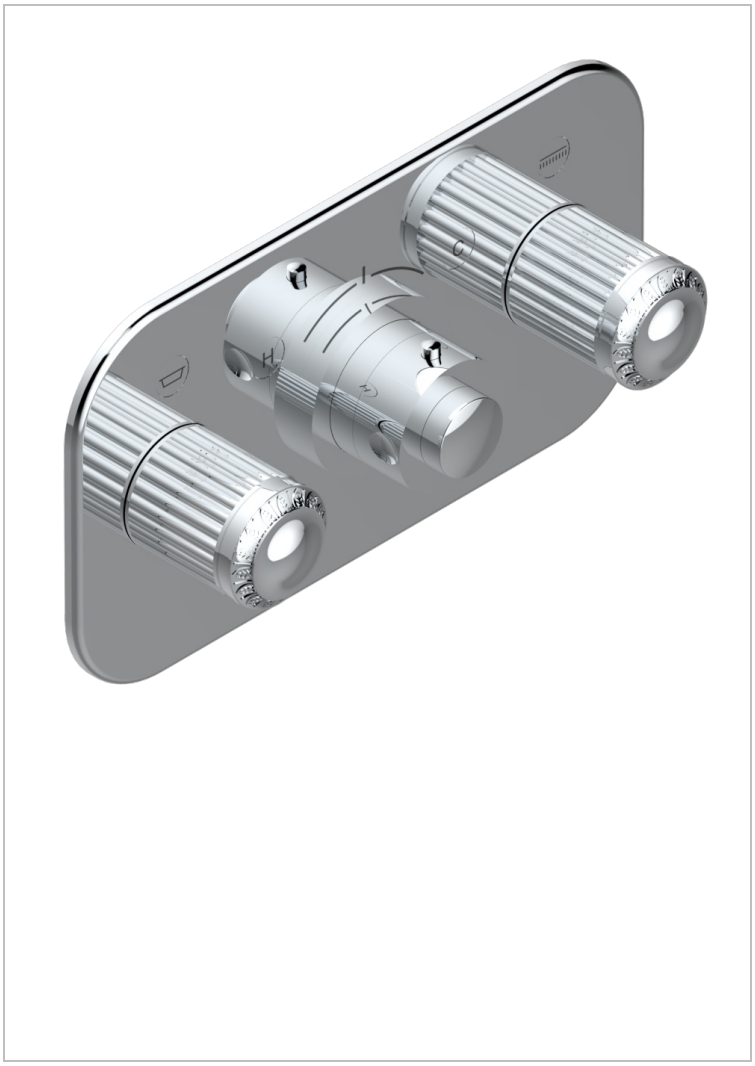

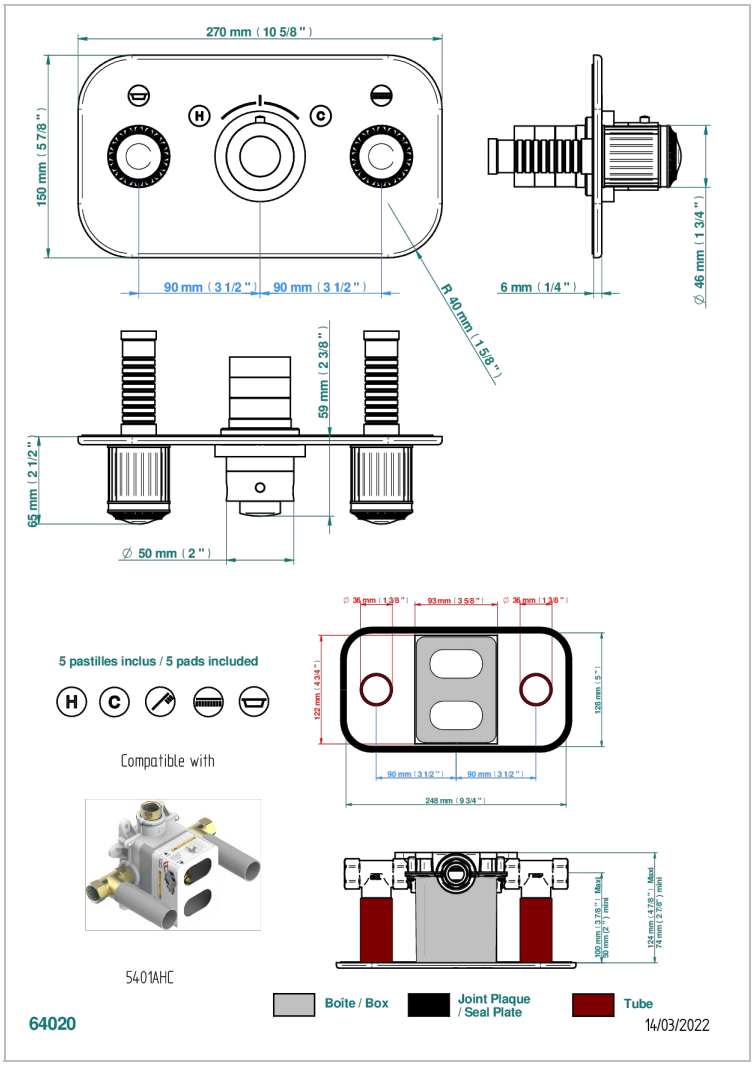

CARACTERÍSTICAS

- Malmaison metal
- Trim for thermostatic mixer with 2 valves item to be installed horizontal . to adapt on 5 401AHC or 5 401AHM

PRODUCTOS RELACIONADOS

- Ref. G00-5401AHC 3/4" THG thermostat, 60 l/mn with two valves with wax cartridge delivered with a built-in box, without trim - to be installed horizontal (for installation with cross handle)
- Ref. G00-5401AHM 3/4" THG thermostat, 60 l/mn with two valves with wax cartridge delivered with a built-in box, without trim - to be installed horizontal (for installation with lever handle)

ACABADOS DISPONIBLES

Bronce claro - D01
Cerámica negra mate - D30
Cobre viejo mate - H07
Cromo - A02
Cromo / dorado - G02
Cromo mate - C02
Dorado - F01
Dorado mate - F07
Dorado pálido - F30
Dorado pálido mate (sin barniz) - F31
Niquel - B01
Niquel mate - C01
Niquel viejo - H28