WHIRPOOL SYSTEM

B12-K14H

Therapiesystem 14 hydrobain jets

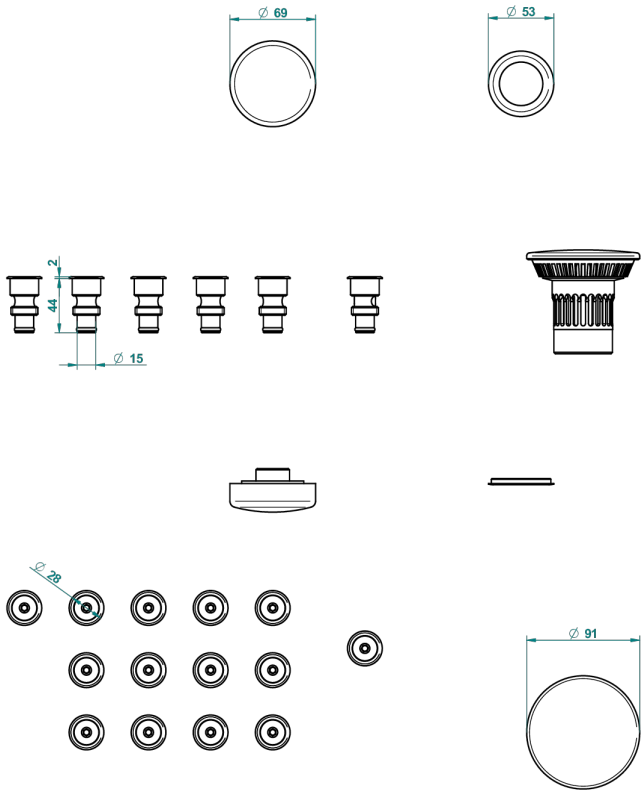

63785

23/12/2019

EIGENSCHAFTEN

- Whirpool system
- Therapiesystem 14 hydrobain jets

VERFÜGBARE OBERFLÄCHEN

Chrom - A02
Pvd blush - H62
Pvd blush matt - H60
Pvd bronze braun - F33
Pvd bronze braun matt - F34
Pvd gold - H52
Pvd graphite - H64
Pvd graphite matt - H65
Pvd messing - H49
Pvd messing matt - H50
Pvd nickel - H55
Pvd nickel matt - H56
Pvd umber - H66
Pvd umber matt - H67