NANO

G5A-5401BEH

Trim for thermostatic mixer with 2 valves item to be installed horizontal . to adapt on 5 401AHC or 5 401AHM

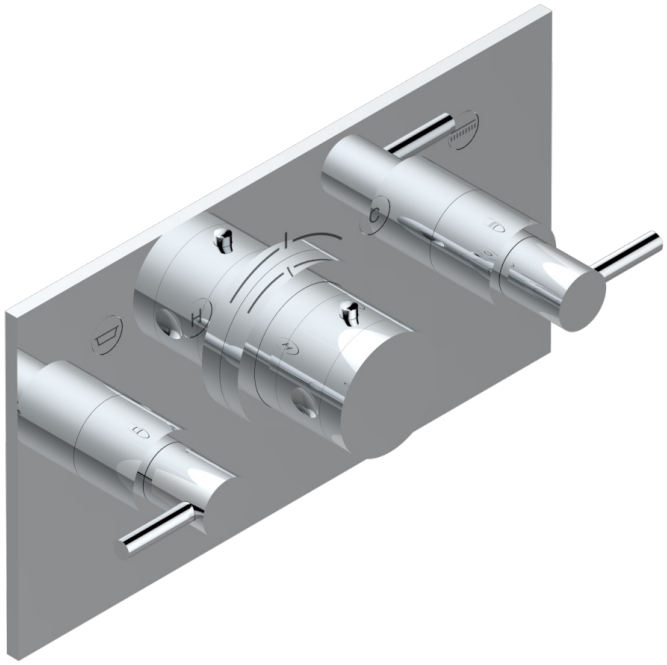

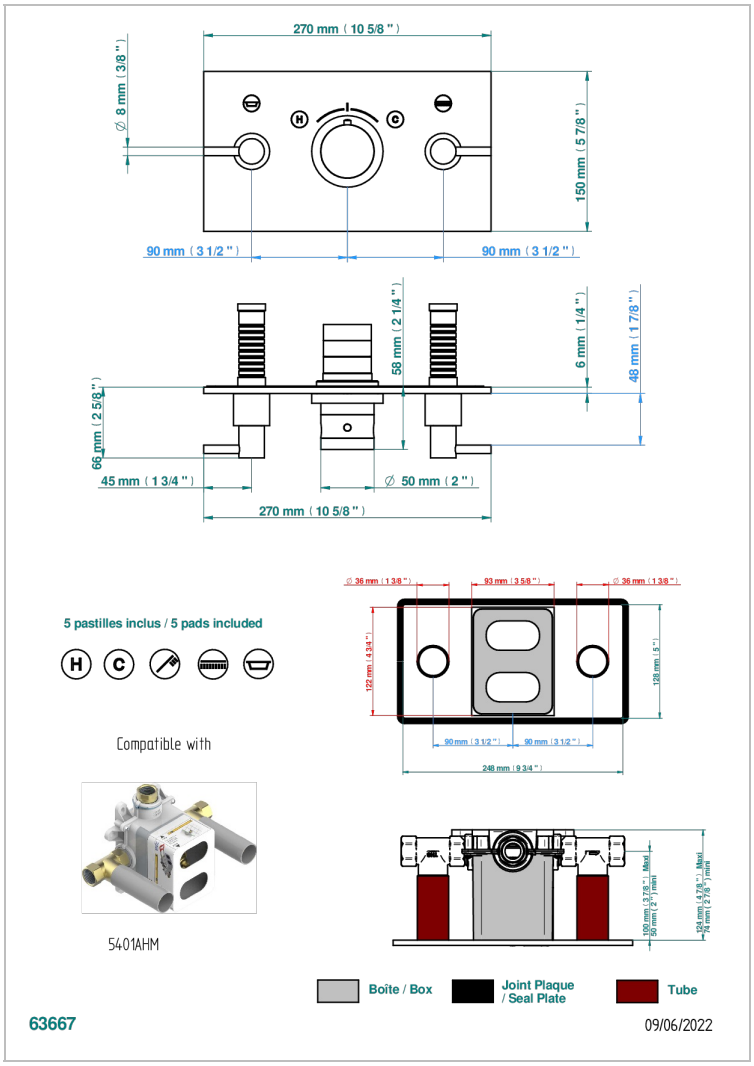

CARACTERÍSTICAS

- Nano
- Trim for thermostatic mixer with 2 valves item to be installed horizontal . to adapt on 5 401AHC or 5 401AHM

ACABADOS DISPONIBLES

Cerámica negra mate - D30
Cromo - A02
Cromo / dorado - G02
Cromo mate - C02
Dorado - F01
Dorado mate - F07
Dorado pálido - F30
Dorado pálido mate (sin barniz) - F31
Niquel - B01
Niquel mate - C01
Niquel viejo - H28