# FREE STANDING BATHTUB

B11-B630

Pagode bathtub 180 x 80 x 65 cm, free standing, delivered without waste

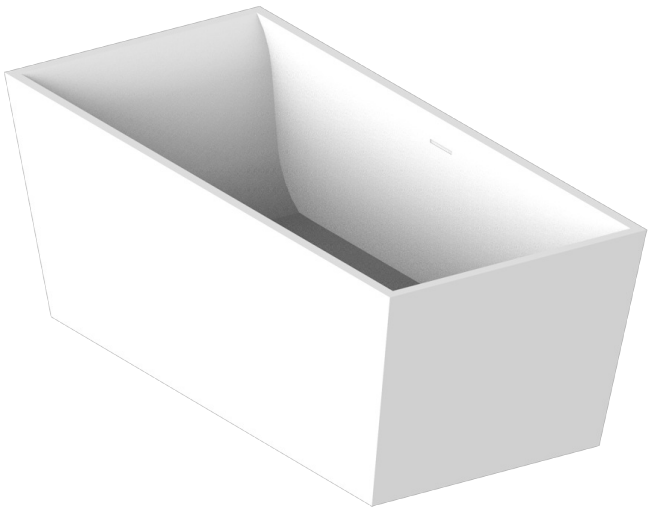

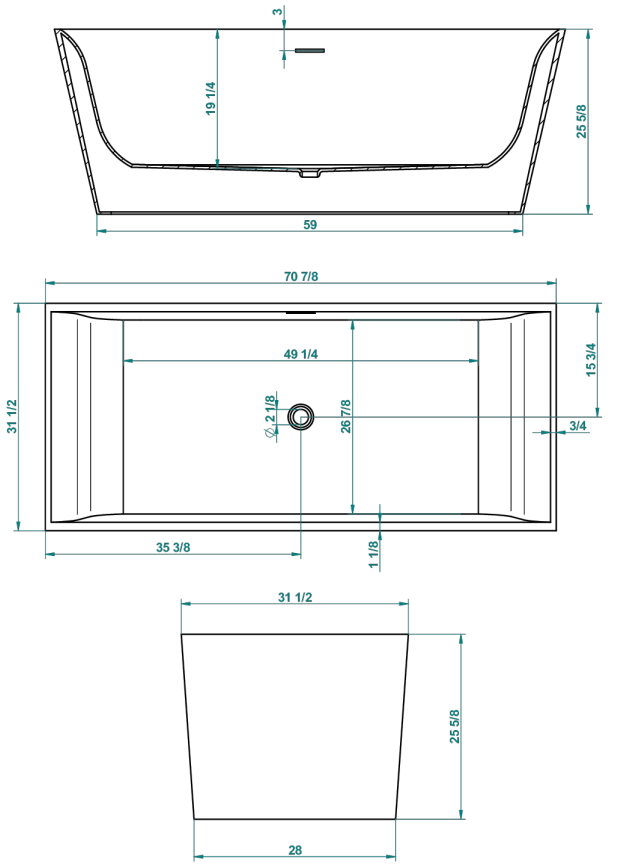


## CHARACTERISTIC

- Free standing bathtub
- Pagode bathtub 180 x 80 x 65 cm, free standing, delivered without waste

## RELATED SKU'S

- Ref. B16-K104 Coverplate for overflow bathtub
- Ref. G00-305/H Complete manual bath click waste
- Ref. B16-P100 Headrest 30 x 30 cm, white
- Ref. B16-P103 Headrest 13 x 26 cm, half cylindrical, white
- Ref. B16-P104 Polyurethane gel headrest 30 x 12 cm, h. 4 cm, white
- Ref. B16-P105 Polyurethane gel headrest 38.5 x 21 cm, h. 2 cm, white
- Ref. B16-P106 Polyurethane gel headrest 30 x 7 cm, h. 2 cm, white
- Ref. B16-P107 Polyurethane gel headrest 35 x 40 cm, h. 5,5 cm,, white

## AVAILABLE FINITIONS

Matt white - AS2
Outside RAL matt, inside matt white - JA6