BANERA ENCASTRADA

B10-B580

Bañera MONACO Ø 180 cm x 61 cm encastrada, entregada sin desagüe

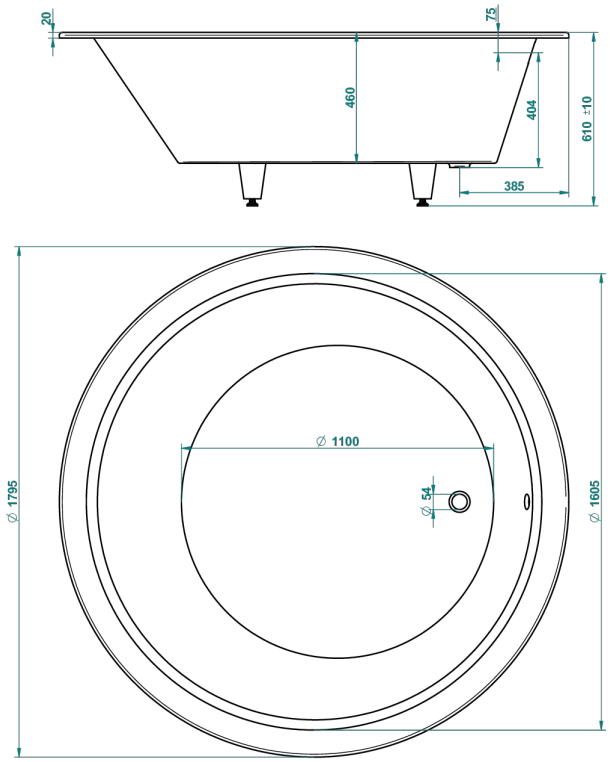

63118

27/11/2017

CARACTERÍSTICAS

- Bañera encastrada
- Bañera MONACO Ø 180 cm x 61 cm encastrada, entregada sin desagüe

PRODUCTOS RELACIONADOS

- Ref. B12-K12A Whirlpool system with 12 aero jets
- Ref. B12-K12H Whirlpool system with 12 hydro jets
- Ref. B12-K12H12A Whirlpool system with 12 hydro jets and 12 aero jets
- Ref. B12-K110 Sistema de desinfeccion
- Ref. B12-K102AB Chromato-lighting system on whirpool bathtub
- Ref. B16-P100 Almohada cuadrada 30 x 30 cm, blanca
- Ref. B16-P103 Almohada 13 x 26 cm, blanca
- Ref. B16-P104 Almohada 30 x 12 cm, h. 4 cm, blanca
- Ref. B16-P105 Almohada 38.5 x 21 cm, h. 2 cm, blanca
- Ref. B16-P106 Almohada 30 x 7 cm, h. 2 cm, blanca
- Ref. B16-P107 Almohada 35 x 40 cm, h. 5,5 cm, blanca
- Ref. B16-K102 Chromato-lighting system on bathtub without whirpool system

ACABADOS DISPONIBLES

Blanco brillante - AS1
Interior brillante RAL (modelo empotrado) - JA1
Mate blanco - AS2