WEST COAST WHITE ONYX

U9G-300/70

浴缸自动分水器，管线长70厘米

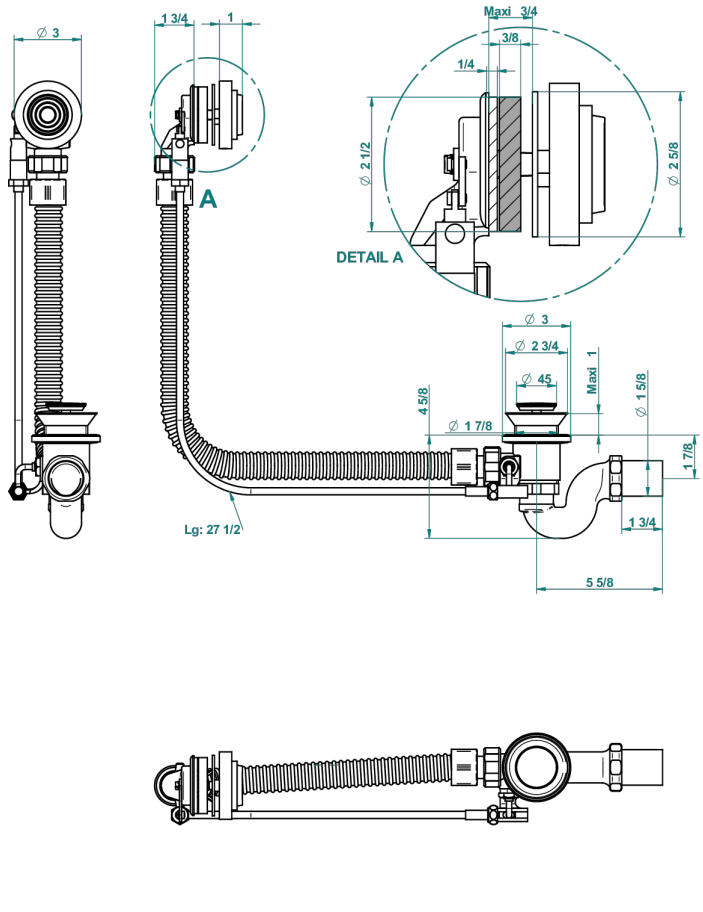

特色

- West Coast White Onyx
- 浴缸自动分水器，管线长70厘米

可选饰面

Blush PVD - H62
Graphite PVD - H64
Matt Umber PVD - H67
Matt blush PVD - H60
Matt graphite PVD - H65
PVD哑光棕铜 - F34
PVD哑光金 - H53
PVD哑光铜 - H50
PVD哑光镍 - H56
PVD抛光铜 - H49
PVD棕铜 - F33
PVD金色 - H52
PVD镍 - H55
Umber PVD - H66
抛光铬 - A02