ANOA

G5D-40GBUS

Trim for wall mounted 3-hole lavatory set only

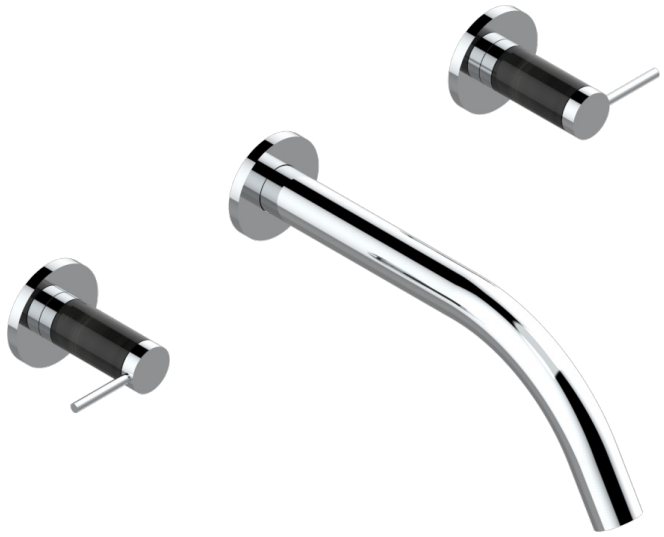

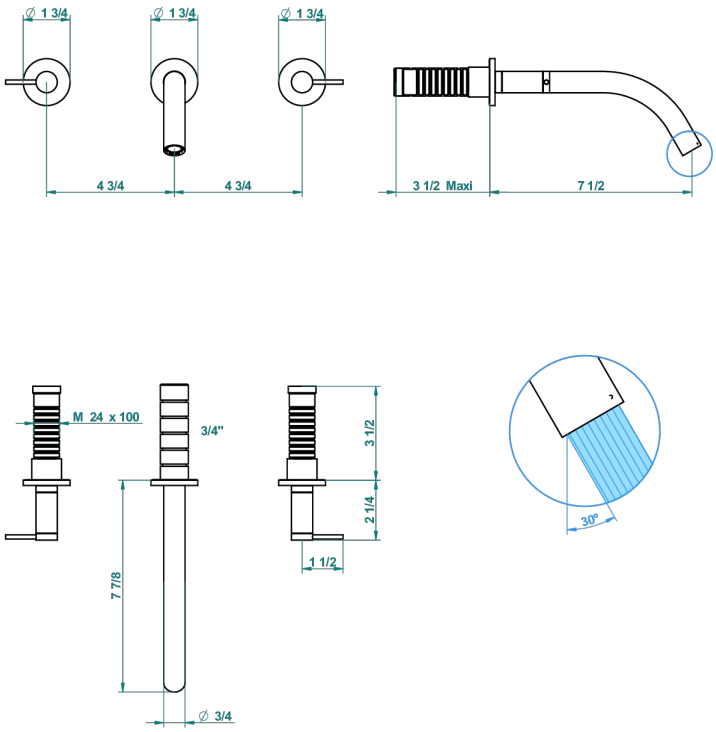

CHARACTERISTIC

- Anoa
- Trim for wall mounted 3-hole lavatory set only

RELATED SKU'S

- Ref. G00-40AM/US Rough parts for wall set (one counter clockwise and one clockwise cartridges)

AVAILABLE FINITIONS

Black ceram - D30
Chrome polished - A02
Chrome polished / gold polished - G02
Gold mat - F07
Gold polished - F01
Matt chrome (American satin) - C02
Matt nickel (American satin) - C01
Nickel antique / Sovereign - H28
Nickel polished - B01
Soft gold - F30
Soft matt gold - F31