NANO WITH LEVER HANDLES

G5B-5840/MUS

Handheld spray bidet with mixing valve, hose, elbow/hook

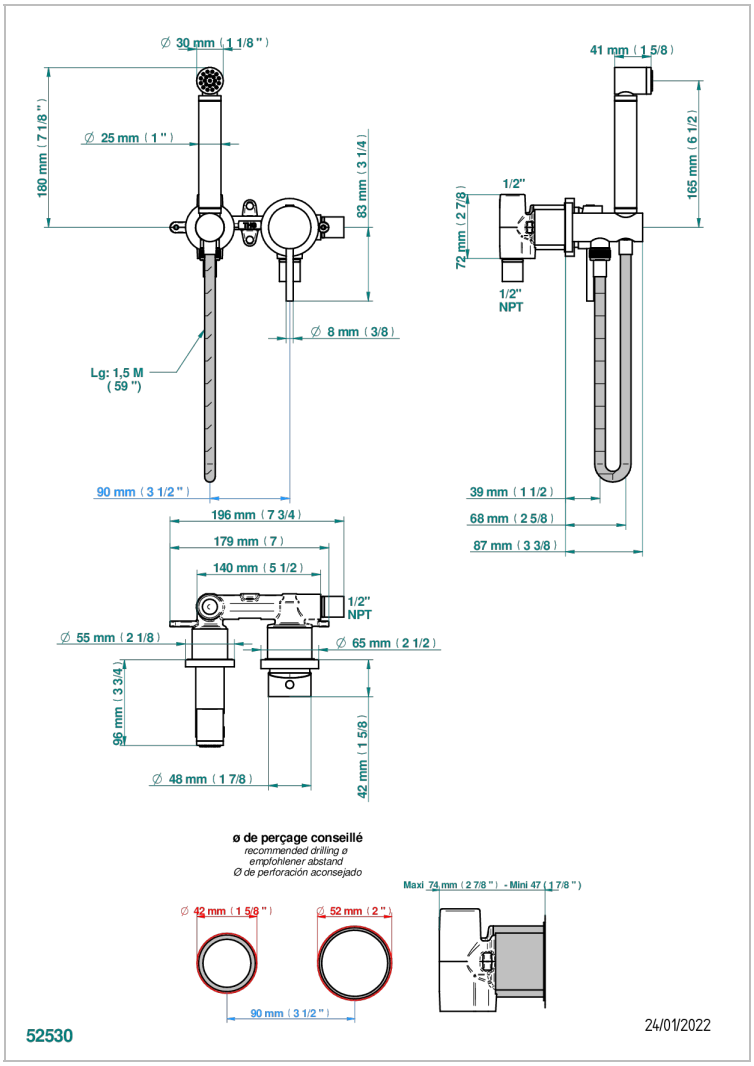

CHARACTERISTIC

- Nano with lever handles
- Handheld spray bidet with mixing valve, hose, elbow/hook

TECHNICAL SPECS

- Recommandé : 3 bars (max. 5 bars) - Advised : 43,5 psi (max. 72 psi)
- 9,5 l/min à 3 bars (2.5 gpm at 43.5 psi)

AVAILABLE FINITIONS

Black ceram - D30
Chrome polished - A02
Chrome polished / gold polished - G02
Gold mat - F07
Gold polished - F01
Matt chrome (American satin) - C02
Matt nickel (American satin) - C01
Nickel antique / Sovereign - H28
Nickel polished - B01
Soft gold - F30
Soft matt gold - F31