SULLY ONICE BLANCO

U1S-40SGB

Trim only for wall mounted 3-hole basin mixer

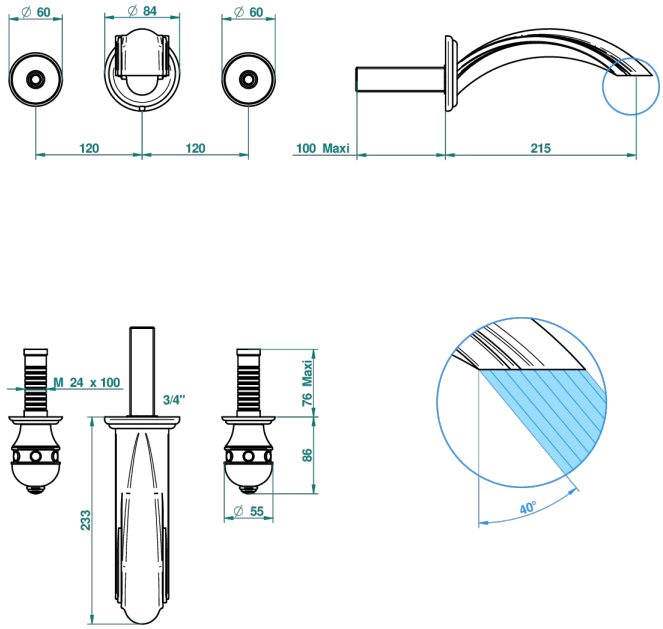

CARACTERÍSTICAS

- Sully Onice Blanco
- Trim only for wall mounted 3-hole basin mixer

PRODUCTOS RELACIONADOS

- Ref. G00-40AC Rough parts for wall mounted 3 hole mixer, cross handle version
- Ref. G00-40AM Rough parts for wall mounted 3 hole mixer, lever handle version

ACABADOS DISPONIBLES

Cerámica negra mate - D30
Cromo - A02
Cromo / dorado - G02
Cromo mate - C02
Dorado - F01
Dorado mate - F07
Dorado pálido - F30
Dorado pálido mate (sin barniz) - F31
Niquel - B01
Niquel mate - C01
Niquel viejo - H28
Pvd blush - H62
Pvd blush mate - H60
Pvd color latón - H49
Pvd color latón mate - H50
Pvd color níquel - H55
Pvd color níquel mate - H56
Pvd color oro - H52
Pvd color oro mate - H53
Pvd grafito - H64
Pvd grafito mate - H65
Pvd marrón bronce - F33
Pvd marrón bronce mate - F34
Pvd umber - H66
Pvd umber mate - H67