ANOA

G5D-1125BSGBB

5-hole bath/shower set with thermostat, high spout, 2 rim mounted valves and shower set

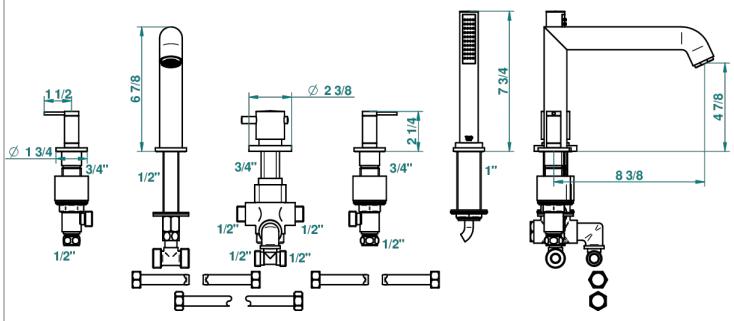

51947

16/01/2014

CHARACTERISTIC

- Anoa
- 5-hole bath/shower set with thermostat, high spout, 2 rim mounted valves and shower set

TECHNICAL SPECS

- Recommandé : 3 bars (max. 5 bars) - Advised : 43,5 psi (max. 72 psi)
- Bec : 35 l/min à 3 bars - Douchette : 9,5 l/min à 3 bars
- Spout : 9.26 gpm at 43.5 psi - Handshower : 2.5 gpm at 43.5 psi

AVAILABLE FINITIONS

Antique nickel - H28
Black ceram - D30
Matt chrome - C02
Matt gold - F07
Matt nickel (color finish) - C01
Polished chrome (color finish) - A02
Polished chrome / Polished gold (color finish) - G02
Polished gold (color finish) - F01
Polished nickel - B01
Soft gold - F30
Soft matt gold - F31