PROFIL METAL WITH LEVER

A6B-6561B

Trim only for wall mixer with complete handshower on hook

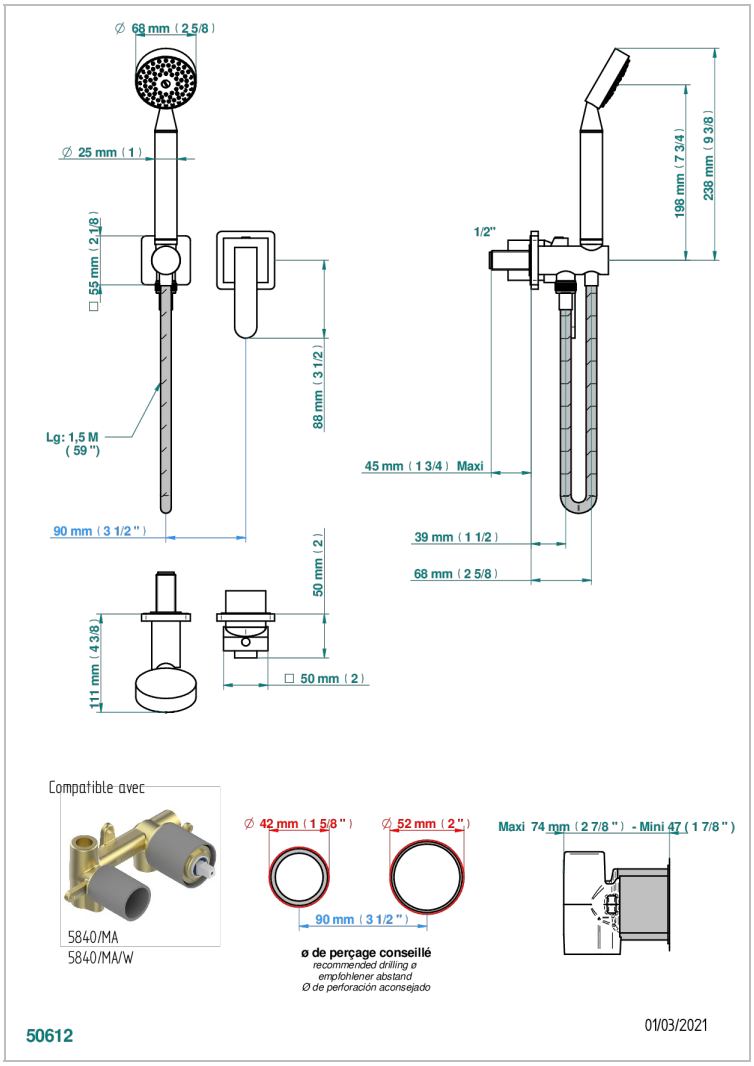

特色

- Profil Metal with lever
- Trim only for wall mixer with complete handshower on hook

技术特征

- Recommandé : 3 bars (max. 5 bars) - Advised : 43,5 psi (max. 72 psi)
- 9,5 l/min à 3 bars (2.5 gpm at 43.5 psi)

相关的SKU

- Ref. G00-5840/MA 卫浴套装，含：入墙式弯管出水管，1米25强化软管，触控式花洒和托勾，美国标准

可选饰面

Black ceram - D30	PVD哑光棕铜 - F34	PVD金色 - H52	哑光铬 - C02	抛光镍 - B01
Blush PVD - H62	PVD哑光金 - H53	PVD镍 - H55	哑光镍 - C01	浅金 - F30
Graphite PVD - H64	PVD哑光铜 - H50	Umber PVD - H66	复古镍 - H28	漆面铜 - D01
Matt Umber PVD - H67	PVD哑光镍 - H56	哑光复古铜 - H07	抛光金（24K金） - F01	
Matt blush PVD - H60	PVD抛光铜 - H49	哑光浅金 - F31	抛光铬 - A02	
Matt graphite PVD - H65	PVD棕铜 - F33	哑光金 - F07	抛光铬/抛光金 - G02	