FAUBOURG, PORZELLAN WEISS, HEBEL

G2J-5840/MBG

Trim only for WC douche including: trigger spray, wall mounted single lever mixer, reinforced hose (1.25m), wall outlet with integrated elbow with safety stopper

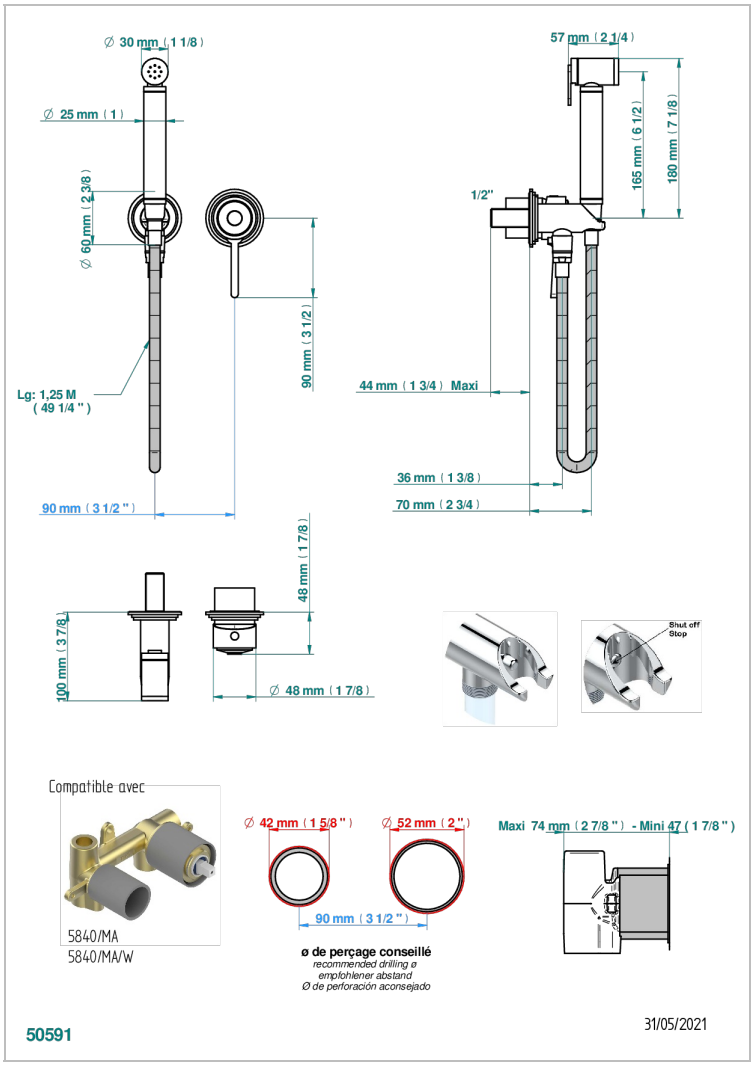

EIGENSCHAFTEN

- ACS : 19ACCLY412

TECHNISCHE DATEN

- Recommandé : 3 bars (max. 5 bars) - Advised : 43,5 psi (max. 72 psi)
- 9,5 l/min à 3 bars (2.5 gpm at 43.5 psi)

ZERTIFIZIERUNGEN

ÄHNLICHE PRODUKTE

- Ref. G00-5840/MA Up-teil für up-mischer, ½"

VERFÜGBARE OBERFLÄCHEN

Altnickel - H28
Blassgold - F30
Blassgold matt unlackiert - F31
Chrom - A02
Chrom / gold - G02
Chrom matt - C02
Gold - F01
Gold matt - F07
Mattschwarz keramik - D30
Natural smoked Brass - A13
Nickel matt - C01
Pvd blush - H62
Pvd blush matt - H60
Pvd bronze braun - F33
Pvd bronze braun matt - F34
Pvd gold - H52
Pvd gold matt - H53
Pvd graphite - H64
Pvd graphite matt - H65
Pvd messing - H49
Pvd messing matt - H50
Pvd nickel - H55
Pvd nickel matt - H56
Pvd umber - H66
Pvd umber matt - H67
Silbernickel - B01