MALMAISON PORTORO

U95-151/US

Widespread lavatory set with drain

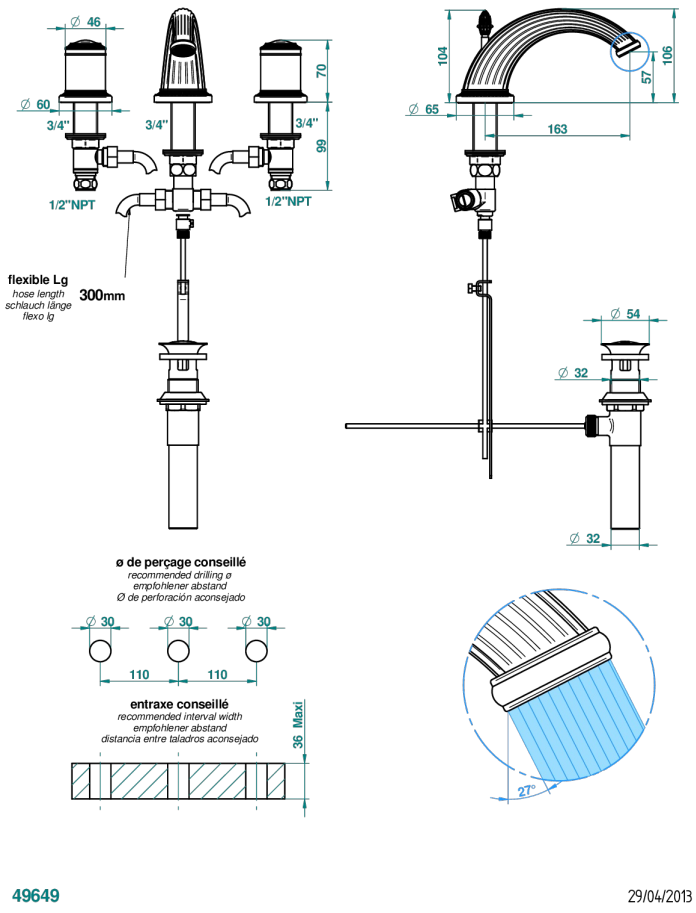

CHARACTERISTIC

- Malmaison Portoro
- Widespread lavatory set with drain

TECHNICAL SPECS

- Recommandé : 3 bars (max. 5 bars) - Advised : 43,5 psi (max. 72 psi)
- 5,7 l/min à 3 bars (1.5 gpm at 43.5 psi)

AVAILABLE FINITIONS

Black ceram - D30
Chrome polished - A02
Chrome polished / gold polished - G02
Copper antique matt, coated - H07
Gold mat - F07
Gold polished - F01
Light coated bronze - D01
Matt chrome (American satin) - C02
Matt nickel (American satin) - C01
Nickel antique / Sovereign - H28
Nickel polished - B01
Soft gold - F30
Soft matt gold - F31