# PROFIL, ONYX SCHWARZ, HEBEL

A6P-41GB

Trim only for wall mounted 3-hole bath mixer

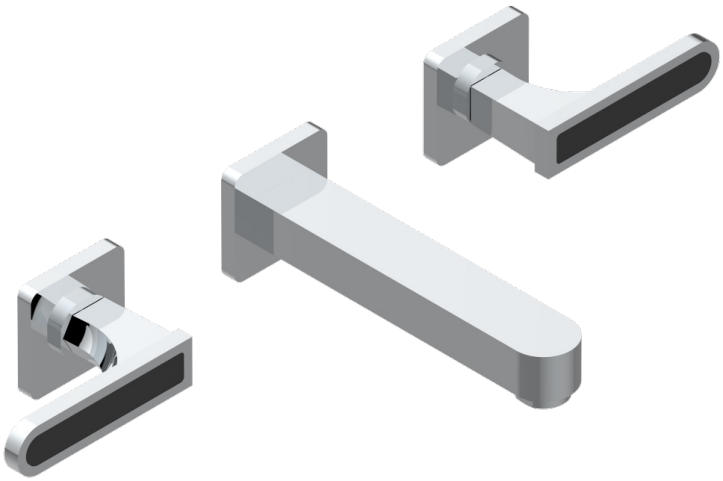

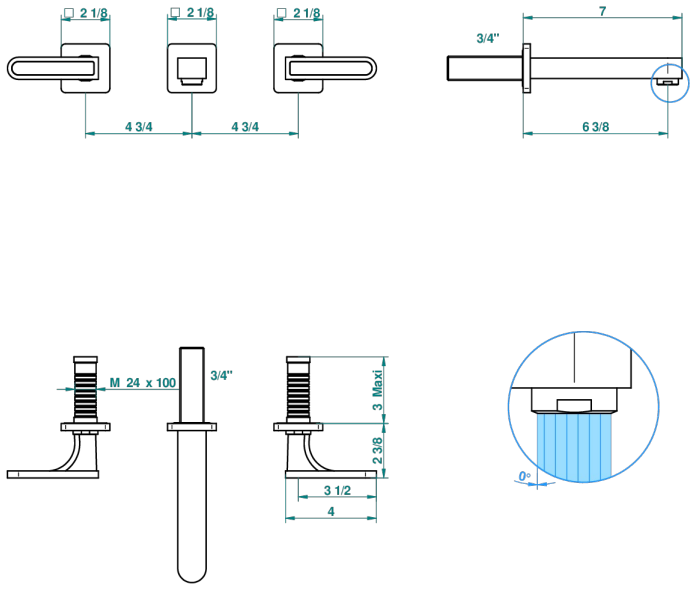


## EIGENSCHAFTEN

- Profil, Onyx Schwarz, Hebel
- Trim only for wall mounted 3-hole bath mixer

## TECHNISCHE DATEN

- Recommandé : 3 bars (max. 5 bars) - Advised : 43,5 psi (max. 72 psi)
- Bec : 35 l/min à 3 bars
- Spout : 9.26 gpm at 43.5 psi

## ÄHNLICHE PRODUKTE

- Ref. G00-40AC Up-teil für wandarmatur
- Ref. G00-40AM Up-teil für wandarmatur

## VERFÜGBARE OBERFLÄCHEN

Altnickel - H28
Blassgold - F30
Blassgold matt unlackiert - F31
Bronze hell - D01
Chrom - A02
Chrom / gold - G02
Chrom matt - C02
Gold - F01
Gold matt - F07
Kupfer altrot matt lackiert - H07
Mattschwarz keramik - D30
Nickel matt - C01
Pvd blush - H62
Pvd blush matt - H60
Pvd bronze braun - F33
Pvd bronze braun matt - F34
Pvd gold - H52
Pvd gold matt - H53
Pvd graphite - H64
Pvd graphite matt - H65
Pvd messing - H49
Pvd messing matt - H50
Pvd nickel - H55
Pvd nickel matt - H56
Pvd umber - H66
Pvd umber matt - H67
Silbernickel - B01