PROFIL LALIQUE, KRISTALL KLAR

A6G-43GB

Basin wall spout 3/4 no T junction

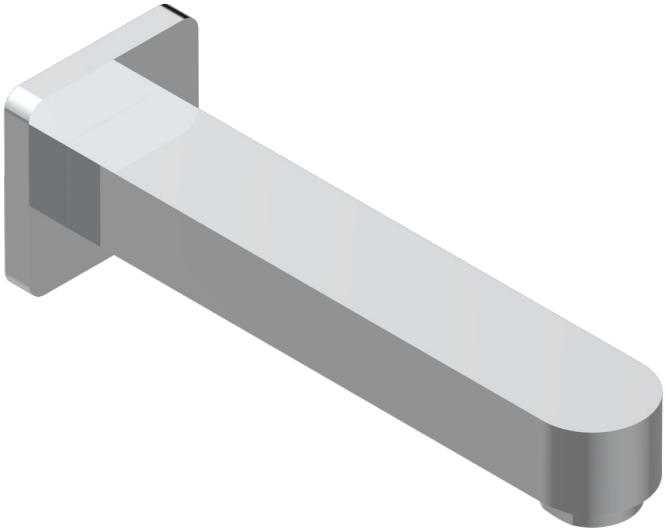

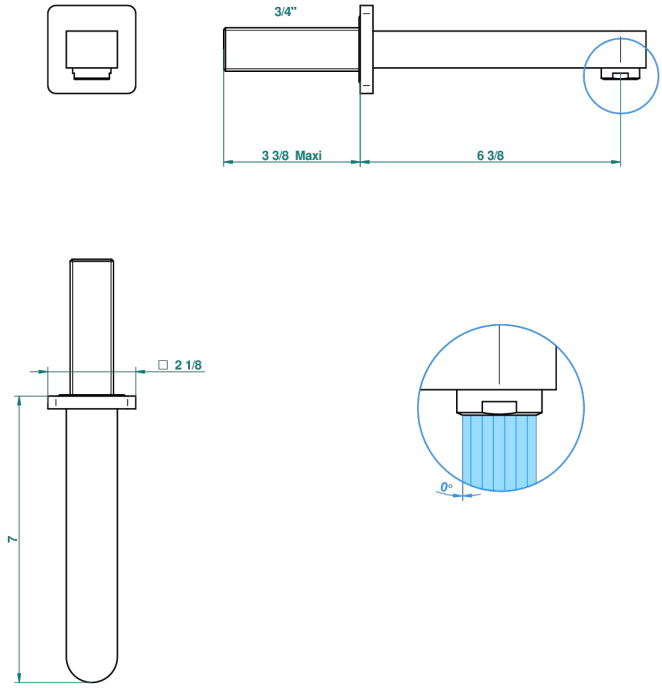

48795

31/01/2013

EIGENSCHAFTEN

- Profil Lalique, Kristall klar
- Basin wall spout 3/4 no T junction

TECHNISCHE DATEN

- Recommandé : 3 bars (max. 5 bars) - Advised : 43,5 psi (max. 72 psi)
- 15 l/min à 3 bars (4 gpm at 43.5 psi)

VERFÜGBARE OBERFLÄCHEN

Altnickel - H28
Blassgold - F30
Blassgold matt unlackiert - F31
Bronze hell - D01
Chrom - A02
Chrom / gold - G02
Chrom matt - C02
Gold - F01
Gold matt - F07
Kupfer altrot matt lackiert - H07
Mattschwarz keramik - D30
Nickel matt - C01
Pvd blush - H62
Pvd blush matt - H60
Pvd bronze braun - F33
Pvd bronze braun matt - F34
Pvd gold - H52
Pvd gold matt - H53
Pvd graphite - H64
Pvd graphite matt - H65
Pvd messing - H49
Pvd messing matt - H50
Pvd nickel - H55
Pvd nickel matt - H56
Pvd umber - H66
Pvd umber matt - H67
Silbernickel - B01