METROPOLIS CLEAR CRYSTAL

A2A-13G/US

Exposed tub filler with cradle handshower, deck mounted

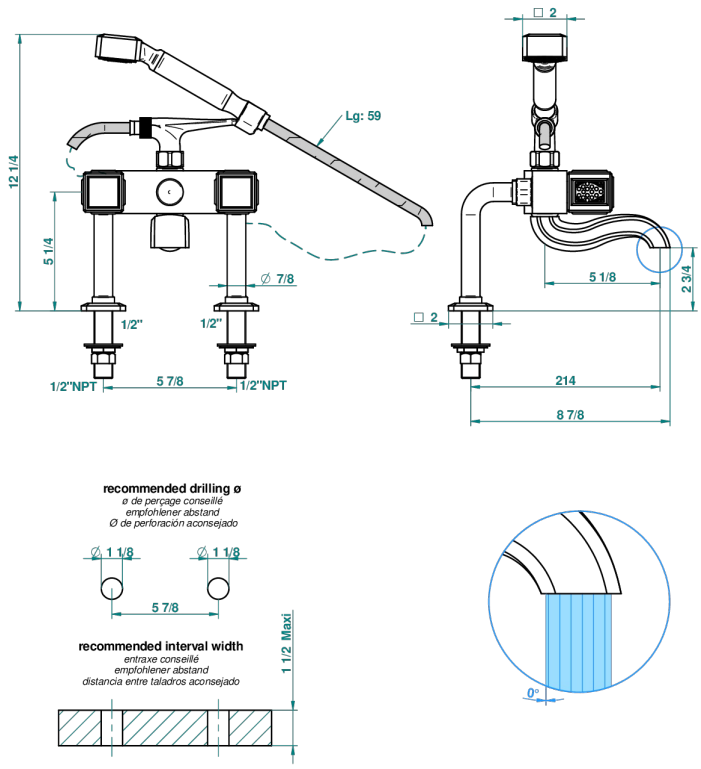

CHARACTERISTIC

- ASME : ASME A112.18.1-2011/CSA B125.1-11

TECHNICAL SPECS

- Recommandé : 3 bars (max. 5 bars) - Advised : 43,5 psi (max. 72 psi)
- Bec : 75 l/min à 3 bars - Douchette : 9,5 l/min à 3 bars
- Spout : 19,8 gpm at 43.5 psi - Handshower : 2.5 gpm at 43.5 psi

STANDARDS

AVAILABLE FINITIONS

Black ceram - D30
Blush PVD - H62
Brass color PVD - H49
Brown bronze color PVD - F33
Chrome polished - A02
Chrome polished / gold polished - G02
Gold color PVD - H52
Gold mat - F07
Gold polished - F01
Graphite PVD - H64
Matt Umber PVD - H67
Matt blush PVD - H60
Matt brass color PVD - H50
Matt brown bronze color PVD - F34
Matt chrome (American satin) - C02
Matt gold color PVD - H53
Matt graphite PVD - H65
Matt nickel (American satin) - C01
Matt nickel color PVD - H56
Nickel antique / Sovereign - H28
Nickel color PVD - H55
Nickel polished - B01
Soft gold - F30
Soft matt gold - F31
Umber PVD - H66