VEGETAL

U5F-1132US

Bath/shower set with goliath spout, 2 x 3/4" valves, rim mounted ceramic mixer tap with progressive cartridge & rim mounted handshower set

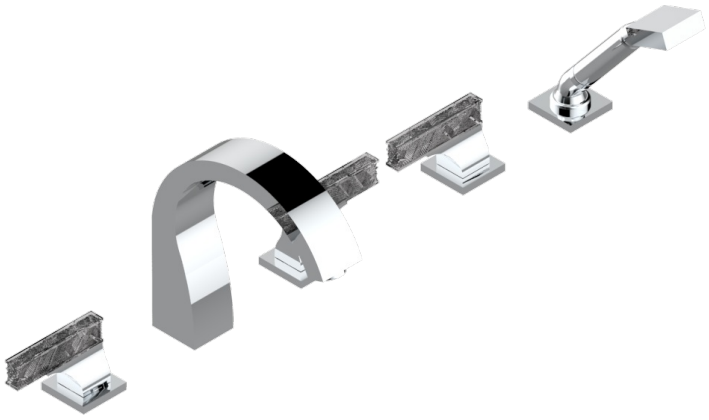

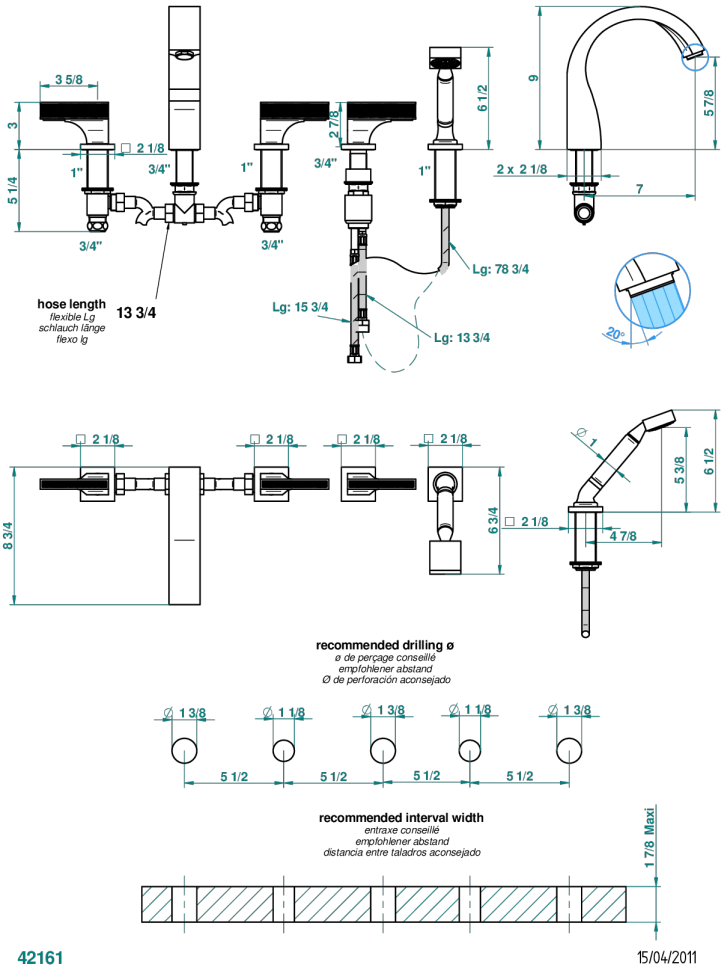

CARACTERÍSTICAS

- Vegetal
- Bath/shower set with goliath spout, 2 x 3/4" valves, rim mounted ceramic mixer tap with progressive cartridge & rim mounted handshower set

ESPECIFICACIONES TÉCNICAS

- Recommandé : 3 bars (max. 5 bars) - Advised : 43,5 psi (max. 72 psi)
- Bec : 35 l/min à 3 bars - Douchette : 9,5 l/min à 3 bars
- Spout : 9.26 gpm at 43.5 psi - Handshower : 2.5 gpm at 43.5 psi

ACABADOS DISPONIBLES

Cerámica negra mate - D30
Cromo - A02
Cromo / dorado - G02
Cromo mate - C02
Dorado - F01
Dorado mate - F07
Dorado pálido - F30
Dorado pálido mate (sin barniz) - F31
Niquel - B01
Niquel mate - C01
Niquel viejo - H28
Pvd blush - H62
Pvd blush mate - H60
Pvd color latón - H49
Pvd color latón mate - H50
Pvd color níquel - H55
Pvd color níquel mate - H56
Pvd color oro - H52
Pvd color oro mate - H53
Pvd grafito - H64
Pvd grafito mate - H65
Pvd marrón bronce - F33
Pvd marrón bronce mate - F34
Pvd umber - H66
Pvd umber mate - H67