AMOUR DE TRIANON

G24-302

Geberit bath waste, adjustable height: mini 165 mm / maxi 390 mm ; adjustable projection: mini 110 mm / maxi 230 mm, outlet ø 40 mm, delivered with stylised control knob - European model

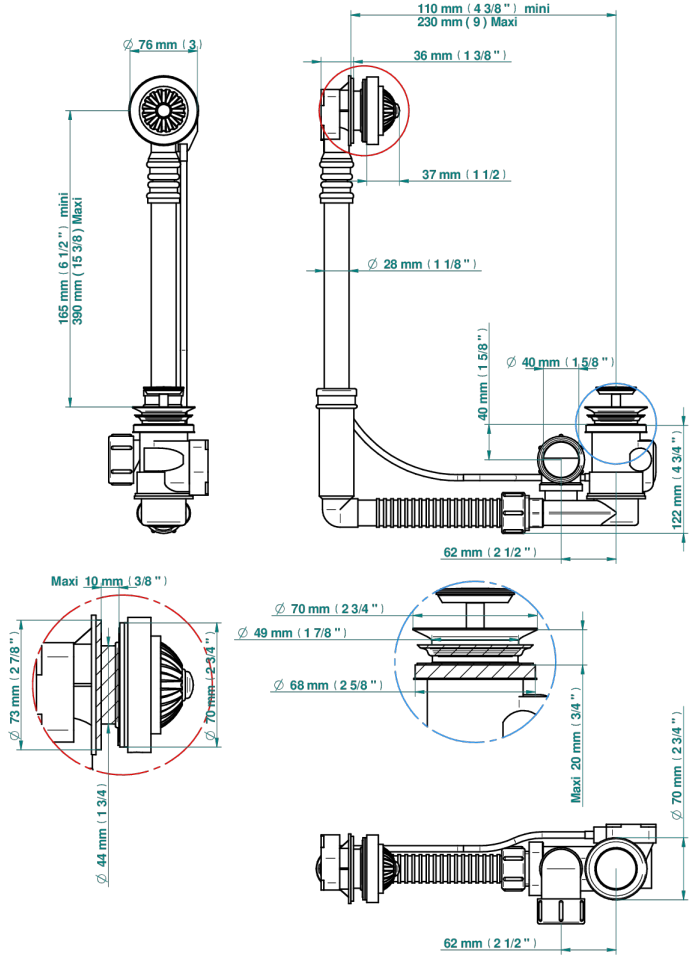

CHARACTERISTIC

- Amour de Trianon
- Geberit bath waste, adjustable height: mini 165 mm / maxi 390 mm ; adjustable projection: mini 110 mm / maxi 230 mm, outlet ø 40 mm, delivered with stylised control knob - European model

AVAILABLE FINITIONS

Polished chrome (color finish) - A02