BROADWAY WITH LEVER

A04-302GM

Geberit bath waste, big size, adjustable height: mini 165 mm / maxi 580 mm ; adjustable projection: mini 110 mm / maxi 700 mm - outlet, ø 40 mm, delivered with stylised control knob - European model

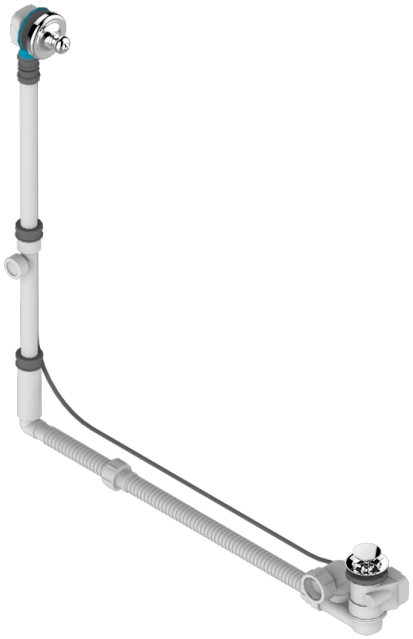

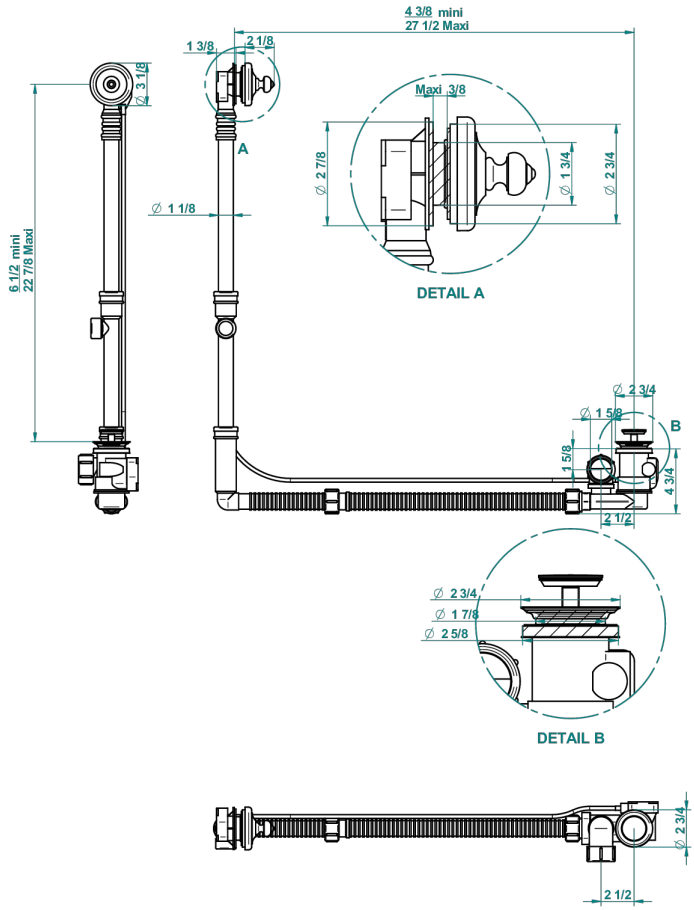

CHARACTERISTIC

- Broadway with Lever
- Geberit bath waste, big size, adjustable height: mini 165 mm / maxi 580 mm ; adjustable projection: mini 110 mm / maxi 700 mm - outlet, ø 40 mm, delivered with stylised control knob - European model

AVAILABLE FINITIONS

Blush PVD - H62
Brass color PVD - H49
Brown bronze color PVD - F33
Gold color PVD - H52
Graphite PVD - H64
Matt Umber PVD - H67
Matt blush PVD - H60
Matt brass color PVD - H50
Matt brown bronze color PVD - F34
Matt gold color PVD - H53
Matt graphite PVD - H65
Matt nickel color PVD - H56
Nickel color PVD - H55
Polished chrome (color finish) - A02
Umber PVD - H66