MONTAIGNE VENUS WHITE MARBLE

G3V-300

Complete bath pop-up waste -cable lg 55 cm

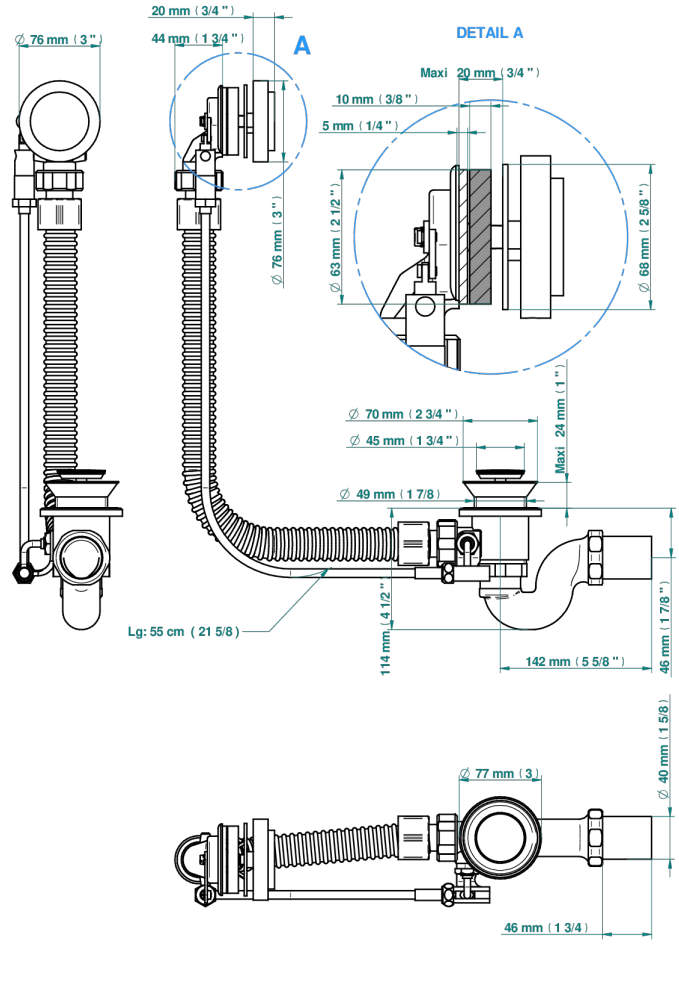

CHARACTERISTIC

- Montaigne Venus white marble
- Complete bath pop-up waste -cable lg 55 cm

AVAILABLE FINITIONS

Blush PVD - H62
Brass color PVD - H49
Brown bronze color PVD - F33
Gold color PVD - H52
Graphite PVD - H64
Matt Umber PVD - H67
Matt blush PVD - H60
Matt brass color PVD - H50
Matt brown bronze color PVD - F34
Matt gold color PVD - H53
Matt graphite PVD - H65
Matt nickel color PVD - H56
Nickel color PVD - H55
Polished chrome (color finish) - A02
Umber PVD - H66