FAUBOURG WHITE PORCELAIN WITH LEVER

G2J-113BSG

Rim mounted 3-hole bath/shower mixer, diverter to super goliath spout with ceramic mixer and handshower set

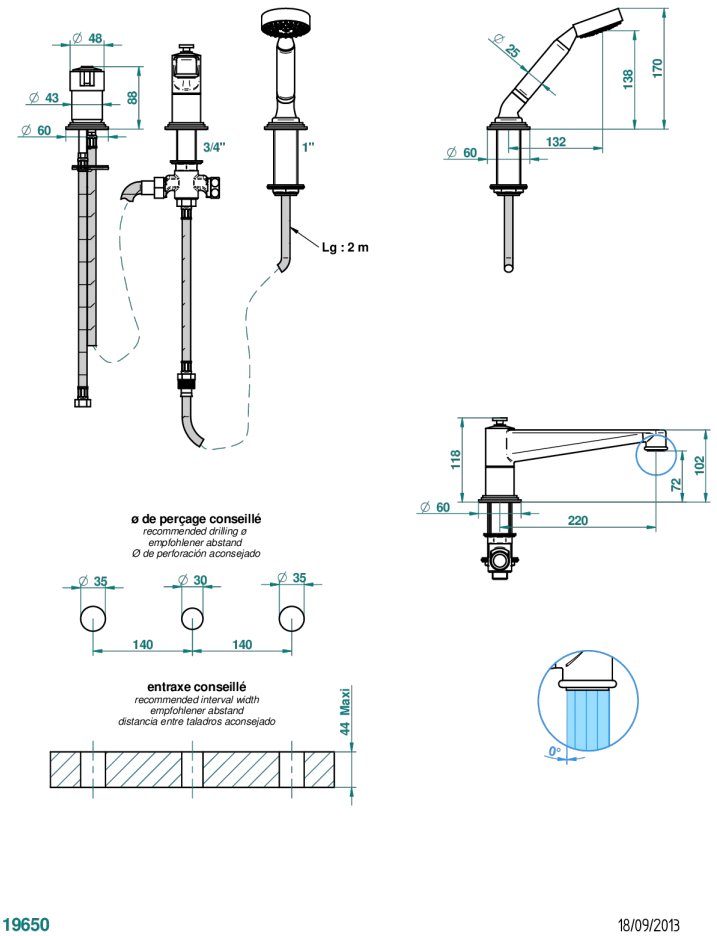

CHARACTERISTIC

- Faubourg White Porcelain with lever
- Rim mounted 3-hole bath/shower mixer, diverter to super goliath spout with ceramic mixer and handshower set

TECHNICAL SPECS

- Recommandé : 3 bars (max. 5 bars) - Advised : 43,5 psi (max. 72 psi)
- Bec : 25 l/min à 3 bars - Douchette : 9,5 l/min à 3 bars
- Spout : 6.6 gpm at 43.5 psi - Handshower : 2.5 gpm at 43.5 psi

AVAILABLE FINITIONS

Antique nickel - H28
Black ceram - D30
Blush PVD - H62
Brass color PVD - H49
Brown bronze color PVD - F33
Gold color PVD - H52
Graphite PVD - H64
Matt Umber PVD - H67
Matt blush PVD - H60
Matt brass color PVD - H50
Matt brown bronze color PVD - F34
Matt chrome - C02
Matt gold - F07
Matt gold color PVD - H53
Matt graphite PVD - H65
Matt nickel (color finish) - C01
Matt nickel color PVD - H56
Natural smoked Brass - A13
Nickel color PVD - H55
Polished chrome (color finish) - A02
Polished chrome / Polished gold (color finish) - G02
Polished gold (color finish) - F01
Polished nickel - B01
Soft gold - F30
Soft matt gold - F31
Umber PVD - H66